Proceedings, Coastal Sediments 99, ASCE, 1999, pp 802-817.

REGIONAL SEDIMENT BUDGET FOR FIRE ISLAND TO MONTAUK POINT, NEW YORK, USA

Julie D. Rosati[1], M. ASCE, Mark B. Gravens[2], M. ASCE, W. Gray Smith[3], M.ASCE

Abstract: The 133-km barrier island chain extending east from Fire Island Inlet to Montauk Point, New York, provides an excellent setting for evaluating sand management practices which have had a significant impact on the local (order of 1-2 km) and regional (133-km) sediment budget. Through the development of a regional sediment budget representative of 1979 to 1995, sediment transport pathways and magnitudes are estimated. Evaluation of the sediment budget in context with sand management during this period highlights those practices that have been influential in the evolution of the barrier island and inlet system.

INTRODUCTION

Regional Sediment Budget

A regional sediment budget is an accounting of gains (sources) and losses (sinks) within a littoral system for a specific period over both local (1-2 km) and regional (10s of km) spatial scales. As human involvement with the nation's inlets and coastal regions approaches or exceeds a century in duration, knowledge of a regional sediment budget becomes more critical in the assessment of whether engineering works enhance or degrade the littoral system. The impacts of engineering activities along the coast, such as inlet stabilization, continual dredging, and regular beach fill placement, increase spatially with time. Thus, consideration

1) Research Hydraulic Engineer, U.S. Army Engineer Waterways Experiment Station, Coastal and Hydraulics Laboratory, 3909 Halls Ferry Road, Vicksburg, MS 39180-6199 USA. jd.rosati@cerc.wes.army.mil
2) Research Hydraulic Engineer, U.S. Army Engineer Waterways Experiment Station, Coastal and Hydraulics Laboratory, 3909 Halls Ferry Road, Vicksburg, MS 39180-6199 USA. m.gravens@cerc.wes.army.mil
3) Coastal Engineer, Moffatt & Nichol, 1629 Thames Street, Suite 400, Baltimore, MD, 21231, USA. gsmith@moffattnichol.com

of the regional scale is vital to determine those engineering activities that have been significant factors in evolving, enhancing, or perhaps degrading the beach.

The south shore of Long Island, extending from Fire Island Inlet in the west to Montauk Point in the east, forms an ideal setting to evaluate the impacts of significant engineering activities on the regional sediment budget. The 133-km-length shoreline encompasses a variety of geologic settings and coastal processes. In general, net LST rates increase from east-to-west, as sediment availability and exposure to wind waves changes. However, reversals in the net LST direction may occur on a local and yearly basis. The five primary morphologic zones are discussed in a regional context in the following section.

Regional Setting and Primary Morphologic Zones

The 58.1-km Montauk Reach extends from Montauk Point in the east to Shinnecock Inlet in the west (Fig. 1). Bluffs rising to 26.5-m relative to National Geodetic Vertical Datum (NGVD) extend from Montauk Point approximately 8 km to the west. The bluffs represent an erosive Pleistocene outcropping which provides a source of littoral and non-littoral material (silt, clay, and rocks) to the ocean shore. Moving west, a 6.4-km long beach fronts a continuous dune system, which is backed by a headland section. The next 30.6-km reach is a sandy beach characterized by ponds and small bays which are typically sealed off from the ocean by the barrier beach, but historically have connected to the ocean during (and after) storms. The ponds are also opened by local residents to enhance water quality. The remaining 13-km of the Montauk reach is characterized by a barrier beach.

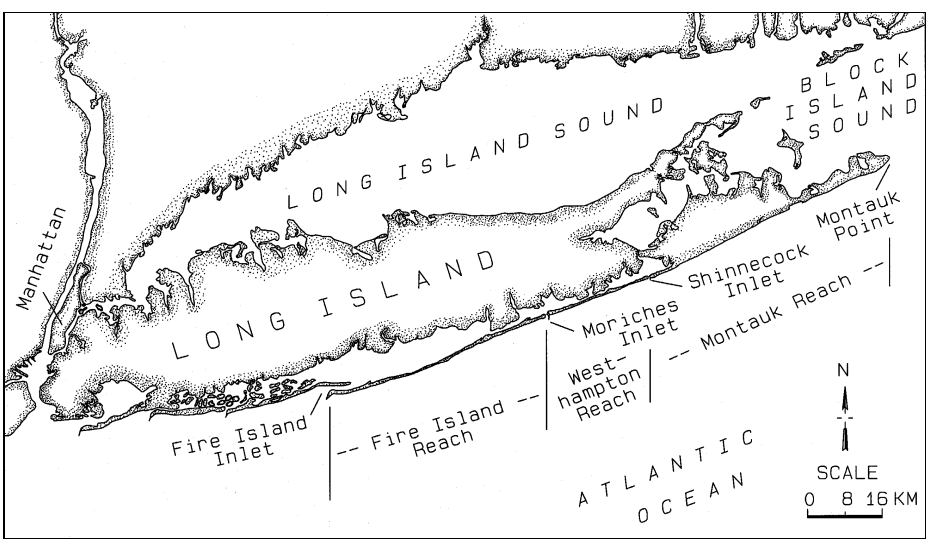

Fig. 1. Project study area and primary morphologic zones.

Shinnecock Inlet is the next major feature within the region, and has historically impacted the adjacent beaches with impoundment on the updrift shoreline and deposition within the inlet, and severe erosion on the west beach. Shinnecock is the eastern-most inlet in the project area, and was created during the hurricane of September 1938. A structure to stabilize the west side of the inlet was constructed by New York State in November and December 1947, and it was extended to its present length from 1953 to 1955. The east jetty

was constructed by local interests from 1952 to 1953. Approximately 1.6 km west of Shinnecock, a salient feature in the present-day shoreline and offshore bathymetry provide morphologic evidence of littoral material transport from the Shinnecock Inlet ebb tidal shoal to the adjacent beaches.

The Westhampton Reach extends from Shinnecock Inlet to Moriches Inlet (24.8 km). From Shinnecock Inlet, the barrier beach continues west 14.8 km at which point the Westhampton Groin Field begins. The 16 groins comprising the Westhampton Groin Field were constructed in three phases, the first two extending from March 1965 to October 1966 (Groins 1 through 11) and 1969 to 1970 (Groins 12 through 15) to stabilize the barrier island over a 5-km reach. The original plan called for 23 groins and beach fill, but was not implemented due to political decisions at the state and local levels (Heikoff 1976). The third addition to the groin field in 1998 included shortening Groin 15, adding Groin 14a (located between Groins 14 and 15) to create a transition section between the groin field and barrier beach, and beach fill within the groin field extending west to Moriches Inlet. Two significant breaches occurred due to storms in 1980 and 1991 within the remaining 5-km of the Westhampton barrier island reach.

Moriches Inlet was formed during a 1931 storm, migrated west, widened during the 1938 hurricane, then closed by natural forces in May 1951. Jetties were constructed on the barrier beach in 1952-1953, and a channel was dredged, beginning from the bay shore. In September 1953, before the channel was completed, storm waves breached the island and, since that time, the inlet has remained opened (Taney 1961a,b). It is believed that the 1980 breach initiated from the bay during the January 14-16, 1980 storm with high bay water levels and strong currents (Schmeltz and McCarthy 1982). Similar to Shinnecock Inlet, a salient feature in the present-day beach approximately 1.5-km west of Moriches Inlet indicates sediment transfer from the inlet's ebb shoal to the adjacent beach.

The Fire Island Reach extends 49.2 km from Moriches Inlet to Fire Island Inlet. A historically eroding barrier beach extends 20-km west from Moriches Inlet. The central portion of Fire Island (approximately 13. 2 km) is the oldest portion of the barrier island and has been relatively stable. The stability of this region and shoals located offshore have led researchers to postulate that either the inner shelf or relic Fire Island Inlet ebb shoals provide a source of littoral sediment to this region (e.g., Schwab 1999). West of this region, the barrier developed as a prograding spit prior to stabilization of Fire Island Inlet.

Fire Island Inlet, unlike Shinnecock and Moriches Inlets, has been a permanent feature since mapping of the shoreline began. From 1834 to 1940, Fire Island Inlet migrated from east to west at a rate of 62.5 m/yr prior to stabilization in 1941 (derived from Taney 1961a). West of Fire Island Inlet is Gilgo Beach, which has been the recent site for placement of dredged material obtained from Fire Island Inlet.

Previous Studies

In this section, several studies pertinent to the present work are briefly reviewed, and net longshore sand transport (LST) rates at boundaries of the primary morphologic zones are noted. The first four columns of Table 1 summarize these studies.

Table 1. Summary of Net Longshore Sediment Transport Estimates (thousands m^3/yr)						
Location	Previous Studies			This Study		
	Taney (1961a,b)	RPI (1983)	Kana (1995)	Impound-ment at Jetty (1940 to 1954)	Democra t Pt. Growth (1870 to 1938)	Regional Sediment Budget (~ 1979 to 1995)
		(1955 to 1979)				
West of Montauk Pt. (8 km)	76.5[a]	72.6[c]	58[c]	-	-	94±40
East of Shinnecock Inlet (approx 2-3 km)	-	233	219	-	-	115±40
West of Shinnecock Inlet (approx 2-3 km)	-	187	104	-	-	45±40
West of Groin Field	-	99	-85	-	-	-1±40
East of Moriches Inlet (approx 2-3 km)	230[b]	140	45	-	-	29±40
West of Moriches Inlet (approx 2-3 km)	-	123	76	-	-	52±40
East of Fire Island Inlet (approx 14.1 km)	-	106[e]	150[e]	-	159 to 238	172±40
East of Fire Island Inlet (approx 2-3 km)	122 to 460[b] ; 344[b] "best"	306[d]	467	-	-	194±40
Fire Island East Jetty		240	360	385[f]	-	176±40

[a] Estimated.
[b] Assumed net LST.
[c] Profile data unavailable; based on Leatherman and Joneja (1980) shoreline position data.
[d] Net LST rate was assumed based on impoundment; all other cells derived from this value.
[e] Based on interpolation across cell 153A (see RPI 1983, Kana 1995).
[f] Considered a high estimate of the net LST.

Taney (1961a,b). Taney presents one of the earliest studies discussing littoral transport processes for the south shore of Long Island, providing geomorphic support for the predominant east-to-west net LST direction. However, he mentions a reversal in the net LST immediately west of Fire Island Inlet, along Gilgo Beach, due to tidal currents and wave refraction on the shoal at the mouth of the inlet. He emphasizes that the littoral drift rate varies with distance alongshore. LST rate estimates are presented based on the migration of inlets prior to stabilization, impoundment at jetties east of the inlets after stabilization, and consideration of inlet dredging records (Table 1). The first method is considered more accurate, due to the fact that the second method cannot account for the quantity of sediment that bypasses the inlet or is lost to the flood or ebb shoals. Taney concludes, "the present rate of littoral drift is much greater than can be derived from this source" (the Montauk Point bluffs). "Streams do not contribute sediments to the system." "Therefore, the great difference between the estimates of the amount of sediments moving and that supplied by the bluff unit of the headlands section would indicate that a source of beach material in addition to the bluffs is required. It appears that the only remaining sources of supply of littoral materials are the existing beaches, and possibly a small portion of the nearshore bottom."

RPI (1983). RPI formulated a regional sediment budget based on profile data from June 1955 to December 1979 to represent "typical" long-term conditions for the study area. In the alongshore direction, 25 fixed compartments were established based on the availability of

profile data (3 to 5 profiles per compartment, up to 305 m apart) and existing morphological features (e.g., inlets). A net LST rate as inferred from impoundment rate at the Fire Island Inlet east jetty (1940 to 1954; 420,000 m^3/yr) formed the basis for calculation of LST rates at each alongshore compartment. A reduced value equal to 306,000 m^3/yr was applied at a location 3.3 km east of the Fire Island east jetty (Table 1). The value was decreased from 420,000 to 306,000 m^3/yr to reflect (a) the reduced sheltering of Democrat Point after impoundment and (b) the change in shoreline orientation to one more parallel with incoming waves. The compartments did not extend offshore to depth of closure; thus, a component of profile adjustment was included to reflect changes due to offshore losses.

Kana (1995). Kana updated RPI's (1983) sediment budget by extending the profile calculations to depth of closure, revising the dredging and beach fill placement records, and modifying the Montauk Point bluff erosion calculation. The middle portion of Fire Island (20 km east of Fire Island Inlet) had a lower net LST rate than expected. During this period, severe erosion of eastern Fire Island was feeding the central portion. Relic Fire Island Inlet shoals appeared to have been a significant source of sediment to the central and western Fire Island beaches through the early 1900s. However, because of the erosion of west Fire Island beaches apparent in the 1955 to 1979 profile data, this source appeared to be largely diminished. To solve the budget, a reversal in net LST was determined to occur west of the Westhampton Groin Field, resulting in 85,000 m^3/yr net LST to the east (6.7 km east of inlet).

Study Objectives

A regional sediment budget was formulated to characterize sediment transport pathways, magnitudes, sources, and sinks, and engineering activities (dredging and beach fill placement) characteristic of the 1979 to 1995 period for the Fire Island to Montauk Point study area. With this regional sediment budget, the significance of recent dredging and beach fill practices to the littoral transport system was assessed, specifically:

- Have these engineering activities been critical in maintaining the barrier island system in its present state?
- Is the postulated source of littoral sediment offshore of central Fire Island required to satisfy the sediment budget?

SEDIMENT BUDGET METHODOLOGY

A sediment budget is a model of sediment **gains** and **losses**, or **sources** and **sinks**, within a specified control volume (or cell), or series of connecting cells, over a given time. There are numerous ways of formulating a sediment budget (e.g., SPM 1984, Jarrett 1991). The difference between the sediment sources and the sinks in each cell, hence for the entire sediment budget, must equal the rate of sediment volume change occurring within that region accounting for pertinent engineering activities. The sediment budget equation can be expressed as,

$$\sum Q_{source} - \sum Q_{sink} - \Delta V + P - R = residual \qquad (1)$$

in which all terms are expressed as a volume or as a volumetric change rate, Q_{source} and Q_{sink} are the sources and sinks to the control volume, respectively, ΔV is the net volume change within the cell, P and R are the amounts of material placed in and removed from the cell, respectively, and *residual* represents the degree to which the cell is balanced. For a balanced cell, the residual is zero. Fig. 2 shows the parameters in Eq. (1) for a typical sediment budget cell in this study, in which x_1 and x_2 represent alongshore coordinates of the cell according to the established baseline which roughly parallels the shoreline.

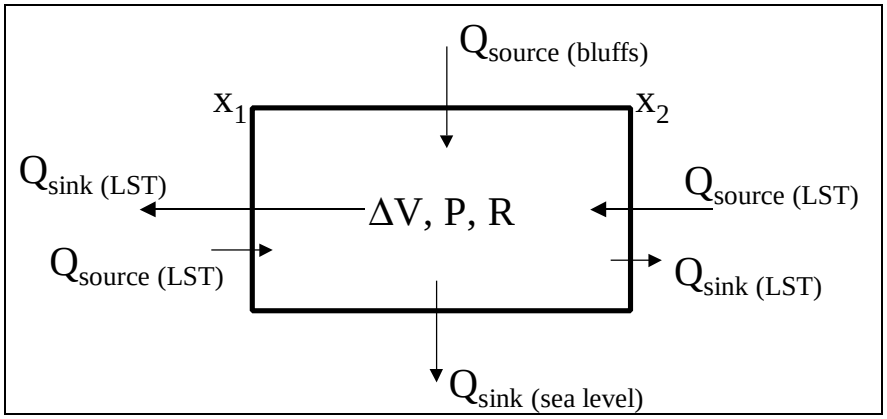

Fig. 2. Typical sources, sinks, and engineering activities formulated for each sediment budget cell.

DATA SETS

Shoreline Position Data

Ten historical shoreline position data sets were available to formulate the sediment budget: 1830, 1870, 1887, Feb-May 1933, Oct 1938, Mar 1962, and Dec 1979 (Leatherman and Allen 1985), Apr 1983, Mar 1988, and Mar/Apr 1995. The first four data sets were derived by Leatherman and Allen (1985) from the U.S. Coast and Geodetic Survey maps, in which the shoreline position is believed to represent the high water or berm crest line (Shalowitz 1962). The 1938, 1962, and 1979 shoreline position data sets were digitized from aerial photography by Leatherman and Allen and according to their description represent "mean high tide shorelines." The latter three data sets were digitized from the interpreted high water line (HWL) shoreline position on digitally rectified scanned aerial photography as a part of this study. All shoreline position data were described at 25-m intervals with respect to an established baseline for each barrier island. Each baseline has its origin in the center of the inlet and is oriented with the general trend of the shoreline. With exceptions for the 1938 and 1962 (post-storm) data, it is believed that this suite of data provides a fair representation of the same discernable feature, i.e., the seaward-most berm crest or high water line.

Volumetric change rates were calculated from the shoreline change rates by assuming that the shoreline is translated over an active depth $D_A(x)$, where the active depth is given as the sum of $B(x)$, the elevation of the seaward-most active berm relative to a datum, and $D_C(x)$, the depth of closure measured from the same datum, and x is the distance alongshore.

Engineering Activities

The engineering history from 1933 to 1995 indicates that beach fill placement has been a significant source of littoral material, or a significant means of inlet bypassing (for those activities involving channel dredging and downdrift beach placement), from Shinnecock Inlet through Gilgo Beach. Fig. 3 shows the cumulative volumetric rate of littoral material placement for the study area beaches for 1979 to 1995 and 1933 to 1979. "Adjusted" data are also presented, which assumed that 75-percent of the breach fill placed during 1979 to 1995 replaced barrier littoral material that had been transported in the cross-shore direction, either towards the bay or offshore. The remainder (25-percent) of this material was assumed to be available for LST. Because pre- and post-breach data were unavailable, this assumption was based on visual inspection of pre- and post-breach aerial photographs. For comparison, also noted in Fig. 3 are the results of the Democrat Point Spit Analysis (discussed below) and Taney's (1961a,b) range of LST rates at Fire Island Inlet. Of primary interest is that the rate of littoral material placement (or transfer from inlets to the barrier beaches) is of the same magnitude as accepted values of net LST.

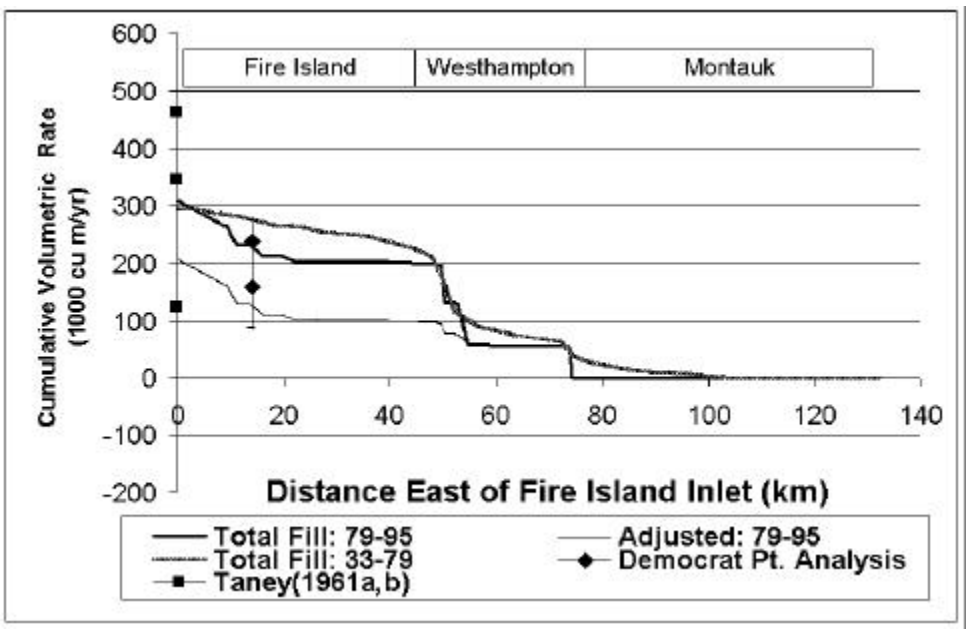

Fig. 3. Cumulative rate of beach fill placement from Fire Island Inlet to Montauk Point.

Profile Data and Topographic Sheets

Profile data from 1979 and 1995 were used to define *B(x)* and D_C *(x)* for the barrier island ocean shoreline. Values of *B(x)* and D_C *(x)* for the bay shoreline, used in an analysis of spit growth for Democrat Point prior to stabilization, were assumed by reducing the ocean values. For the Montauk Point bluff region, values for *B(x)* ranged from those determined for the barrier island ocean shoreline (Alternative 1) to higher values representing the bluff crest line as derived from 1980 topographic sheets (Alternative 2). In an analysis determining the rate of new spit growth at Democrat Point prior to

stabilization, lower and upper values for $D_A(x)$ were estimated based on the ocean and bay values. Specifically,

- Barrier Ocean Shoreline: $B(x) = 3.5$ m relative to National Geodetic Vertical Datum *(NGVD)* and $D_C(x) = -7.0$ *m NGVD*
- Barrier Bay Shoreline: $B(x) = 1.5$ *m NGVD*, and $D_C(x) = -2.0$ *m NGVD*
- Montauk Bluffs – Alternative 1: $B(x) = 3.5$ *m NGVD*, and $D_C(x) = -7.0$ *m NGVD*
- Montauk Bluffs – Alternative 2: $B(x) = 1.8$ *to 26.5 m NGVD*, and $D_C(x) = -7.0$ *m NGVD*. Note that if the shoreline fronting the bluffs was accretional during a particular time period, $D_A(x)$ = 10.5 m was applied. (i.e., the bluff was not "re-created" during periods of accretion).
- Growth of Democrat Point: $D_{A\ lower}(x) = 7.0$ *m*, and $D_{A\ upper}(x) = 10.5$ *m*.

ANALYSES

Contribution of Montauk Point Bluffs

Two sediment budget Alternatives were evaluated to determine the potential contribution of the Montauk Point bluffs to the littoral system. Alternative 1 implied that the bluffs were an insignificant source of littoral material (0 m^3/yr). Alternative 2 used the bluff crest elevation to determine the active depth for an erosional shoreline. Assuming that the bluff material is entirely littoral material (sandy), Alternative 2 results in bluff source values equal to 62,000 m^3/yr (1979 to 1995) and 66,200 m^3/yr (1983 to 1995). Based on sieve analysis data for the Montauk Point bluffs (personal communication, Henry Bokuniewicz, 1999), approximately 63-percent of the size fraction (by weight) falls within the "fine sand" (0.125 mm) to "coarse sand" (1.0 mm) range based on the Wentworth soil classification. For formulation of Alternative 2, a conservative value of 50-percent littoral material was applied to the Montauk Point bluff region, resulting in a littoral material contribution ranging from 31,000 to 33,100 m^3/yr. The final regional sediment budget was developed by assuming a mean bluff contribution equal to 33,000 m^3/yr, with an uncertainty (based on values from earlier studies, see Table 1) equal to $\pm$ 33,000 m^3/yr.

Democrat Point Spit Growth Prior to Stabilization

Spit growth rates and net transport rates in the vicinity of Fire Island Inlet were estimated using Fire Island Inlet bay and ocean shoreline position data prior to stabilization. Pre-stabilization data are dated 1870, 1887, 1933 (no months available), and October 1938. A location 14.1 km east of the present-day inlet represents a relatively stable portion of the barrier island, as opposed to the migrating spit. Spit growth most likely included many littoral processes that occurred in the vicinity of the inlet, e.g., net and gross LST, which varied through time as the shoreline changed orientation; and onshore movement of the ebb shoal as it was abandoned due to the westward movement of Fire Island Inlet. Thus, an approximation of net LST was estimated at 14.1 km east of the inlet. Net LST at this location averaged 159,000 $\pm$ 72,800 m^3/yr ($D_A = 7$ *m*) to 238,000 $\pm$ 35,300 m^3/yr ($D_A = 10.5$ *m*).

Impoundment rate at Democrat Point

Using data for nine profiles provided by Taney (1961a), the impoundment rate at the East Fire Island Inlet jetty from 1940 (immediately after construction; jetties were constructed from 1939 to 1941) to 1954 (estimated date of full impoundment) was calculated as 385,000 m^3/yr (Table 1). Assuming that the jetty was a total barrier, this rate

most likely represents a high estimate of the net LST rate, for reasons as cited by RPI (1983; see previous summary) and possible accretion due to onshore welding of the eastern portion of the Fire Island ebb shoal.

Potential Longshore Sand Transport Rate Calculations

Net, left-, and right-directed LST rates were calculated from Fire Island to approximately 6 km west of Montauk Point using the Wave Information Study (WIS) 1976-1994 hindcast database, with adjustments made based on comparison to measured wave data at two locations (offshore of Westhampton and Fire Island). Potential LST rates were calculated by transforming the adjusted wave database over the nearshore bathymetry. The transport rate coefficients were adjusted such that the magnitude of the potential transport rate agreed with accepted rates at Fire Island Inlet. These coefficients (K_1=0.2, K_2=0.15; see Gravens et al. 1999 for details) were held constant for the entire study domain. Results were applied in formulating the regional sediment budget. Specifically, magnitudes of the net LST rate as determined by the sediment budget were checked against the potential net LST rate calculations and modified, if appropriate. In addition, the standard deviation in the 19-year time series was applied to develop uncertainty limits for the regional sediment budget.

Beach Loss due to Relative Sea Level Rise

The rate of relative sea level rise, as estimated from 90 years of tidal records at the Battery in New York City, was 0.003 m/yr. The long-term beach loss due to an increase in relative sea level was calculated (Bruun 1962) as –0.16 m/yr for the Montauk Reach and –0.19 m/yr for the Westhampton and Fire Island Reaches. Montauk Reach had a lower value due to a steeper profile shape as compared to the remainder of the study area. This rate was converted to a volumetric loss and was applied to all ocean shoreline cells within the sediment budget.

Wind-blown Sand Transport

Gains and losses due to wind-blown sand transport can be a contributing factor to the observed shoreline position. Onshore-directed winds can remove sand from the shoreline as wind-blown sand transport creates dune features. In fact, this process was an active contributor in rebuilding dunes that were entirely lost during the "Ash Wednesday" storm in 1962. By 1979, onshore wind-blown sand transport and beach fill placement had completely rebuilt the dune system. Since 1979, the dune system has been fairly well-established and vegetated. Conversely, offshore-directed winds can remove sand from the beach. For the regional sediment budget, which represents sediment transport and engineering activities within the 1979 to 1995 period, dune growth has been minimal. Thus, the contribution of wind-blown sand transport was assumed to be minor.

Inlet Sediment Budgets

Inlet sediment budgets representative of the 1979 to 1995 period were formulated using shoreline position data, bathymetric data, dredging and placement history, and knowledge of the site. Sources and sinks for each budget are detailed in the next section. Moffatt & Nichol and URS Consultants (1999) present details of the inlet budgets.

CONCEPTUAL SEDIMENT BUDGET

Formulation

The most fundamental activity in the process of developing a sediment budget is to review and integrate existing knowledge of the site with the goal of developing a *conceptual sediment budget*. The conceptual sediment budget represents a working hypothesis of sediment-transport magnitudes and pathways. A conceptual sediment budget for the 1979 to 1995 period was formulated based on earlier studies and the initial analyses discussed previously. The conceptual budget was formulated for the region as a means of "bracketing" reasonable values for sources and sinks to the littoral system, and to discern any potential problems with the available data and applied assumptions. The final conceptual budget is shown in Fig. 4 for each primary morphologic reach. In Fig. 4, Q_{net} is the net LST rate entering or exiting a cell; Q_{bluff} is the source of littoral material from the Montauk Point bluffs; Q_{sl} is the beach loss attributed to relative sea level rise; Q_{breach} is the cross-shore beach loss estimate due to breaches; and *DV*, *P*, and *R* are as defined in Eq. (1) based on the Dec 1979 to Mar/Apr 1995 shoreline position data, except for the Montauk Reach (discussed below). Note that the inlet cells include the inlet channel, ebb and flood shoals, and adjacent beaches for approximately 3 km on both sides of the inlet.

Results

Montauk Reach. The *DV* and *P* values based on the 1979 to 1995 data (see Fig. 4) applied in Eq. (1) require an eastward-directed net LST rate at the western boundary equal to 55,000 ± 33,000 m^3/yr. Previous sediment budgets have estimated a westward-directed net LST rate in the vicinity of Shinnecock Inlet for the 1955 to 1979 time period in the

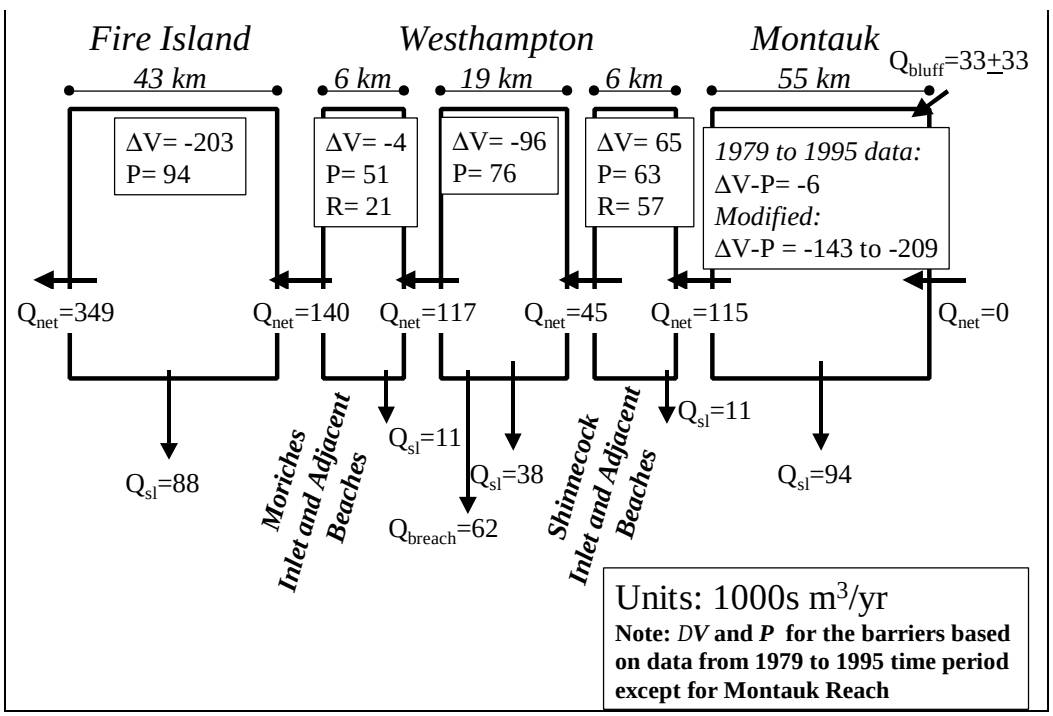

Fig. 4. Final conceptual regional sediment budget (representative of 1979 to 1995 period).

range of 219,000 to 233,000 m^3/yr. The conceptual budget requires a *reversal* (eastward-directed) in the net LST rate east of Shinnecock to balance Eq. (1). This is not a representative condition for the 1979 to 1995 period, indicating that other data and/or assumptions for the Montauk Reach are faulty. The potential LST calculations conducted

as a part of this study indicated a net LST rate 3 km east of Shinnecock Inlet equal to 115,000 m^3/yr. Applying this rate, several modifications to the conceptual budget could be postulated such that Eq. (1) is balanced:

1. Replace offshore losses due to sea level rise with an **onshore source** equal to 76,000 $\pm$ 33,000 m^3/yr;
2. Increase beach fill placement from zero to 170,000 $\pm$ 33,000 m^3/yr;
3. Increase the mean bluff contribution from 33,000 m^3/yr to 203,000 m^3/yr;
4. Increase the volumetric loss of the barrier from –6,000 to –176,000 $\pm$ 33,000 m^3/yr (equal to –143,000 to –209,000 m^3/yr), which is equivalent to a shoreline change rate for the entire barrier of approximately –0.3 m/yr; or
5. A combination of modifications (1) through (4).

Modification (1) proposed above does not have any data for support, and therefore is omitted as a consideration. For modification (2), a review of the analyses conducted within this study indicates that beach fill placement from 1933 to 1979 was approximately 39,000 m^3/yr, indicating that an assumption of **no** beach fill placement from 1979 to 1995, despite a lack of data, might be unreasonable. Increasing the placement rate to the required 170,000 m^3/yr (modification (2)) does not seem realistic. However, it is believed that undocumented beach fill placement has occurred for the Montauk Reach during the 1979 to 1995 period. Modification (3) is a potential consideration, although data and previous sediment budgets do not support this large bluff contribution rate. Modification (4) appears more reasonable. Considering the shoreline change rates for this barrier, three of the six time periods evaluated within this study meet or exceed the required erosion rate of –0.3 m/yr, indicating that this is not an unreasonable change to the conceptual sediment budget. If the net LST rate just east of Shinnecock Inlet were required to be equal to that of previous studies (219,000 to 233,000 m^3/yr), the required shoreline change rate for the Montauk Reach would be –0.48 to -0.51 m/yr. Again, three of the six time periods meet or exceed this required erosion rate. Based on this analysis, the regional sediment budget has been formulated to employ modifications (2) and (4) such that the net LST rate approximately 3 km east of Shinnecock Inlet agrees with the potential LST calculations at this location, 115,000 m^3/yr. Thus, the volumetric change rate, accounting for any beach fill placement, is assumed to range from –143,000 to –209,000 m^3/yr (Fig. 4). This assumption will be checked with accepted values of net LST rates at the other inlets, and modified if necessary.

Shinnecock Inlet. The values shown in Fig. 4 applied in Eq. (1) require a net transport 3 km west of the inlet equal to 45,000 m^3/yr. From inspection of aerial photographs and visual observations at the site, this result is reasonable.

Westhampton Reach. Application of Eq. (1) results in a net LST rate 3 km east of Moriches Inlet equal to 117,000 m^3/yr. The previous sediment budgets estimated a range from 45,000 to 140,000 m^3/yr, lower than Taney's original estimate (230,000 m^3/yr). However, all the sediment budgets reflect conditions after construction of the Westhampton Groin field (completed in 1970), which interrupted the net LST. The conceptual budget is considered reasonable.

Moriches Inlet. Application of Eq. (1) indicates a net LST equal to 140,000 m^3/yr 3-km west of the inlet, directed to the west. Previous sediment budgets have estimates ranging

from 76,000 to 123,000 m^3/yr. This conceptual budget result is slightly high, but is considered reasonable.

Fire Island Reach. Values applied in Eq. (1) result in a net LST rate 3 km east of Fire Island Inlet equal to 349,000 m^3/yr. The conceptual sediment budget result is within the range of Taney's (1961a,b) proposed values; higher than the estimates based on the growth rate of Democrat Point prior to stabilization; higher than RPI's (1983) sediment budget; and lower than the rate estimated by Kana (1995). For the purposes of the conceptual sediment budget, this result is considered within the range of accepted values. In addition, it is concluded that the previous assumption of a net LST rate east of Shinnecock Inlet, which was adopted from the potential LST calculations (115,000 m^3/yr), was reasonable. Formulation of a macro-budget is accomplished by combining all cells of the final conceptual budget (Fig. 4). The macro-budget satisfies Eq. (1) with a residual of zero, a final check prior to proceeding with the detailed budget.

REGIONAL SEDIMENT BUDGET

The regional sediment budget represents coastal processes, engineering activities, and structure conditions reflected by the 1979 to 1995 period. The budget was developed using the data and analyses discussed previously with equal weighting of the 1979 to 1995 and the 1983 to 1995 sediment budgets. Bluff contribution Alternative 2 (33,000$\pm$33,000 m^3/yr) was applied. Uncertainties associated with net LST at each primary morphologic reach were estimated based on the potential LST calculations. Specifically, following a procedure discussed by Kraus and Rosati (1999), the standard deviation in the net LST rate was divided by the square root of the number of yearly averages ($\sqrt{29}$) to give a representative decadal-scale variability. This value ranged from 30,000 to 40,000 m^3/yr for the study area, and a conservative value of uncertainty in the net LST rate equal to 40,000 m^3/yr was applied. Sub-morphologic cells were defined based on knowledge of site processes, engineering activities, and erosion/accretion trends indicated by the shoreline position data. The sediment budget based on sub-morphologic cells is presented in Fig. 5. Net LST rates for the regional sediment budget are compared to the potential LST calculations in Fig. 6.

Figs. 5 and 6 and Table 1 indicate that nearly all net LST values of the regional sediment budget are lower than those estimated by earlier studies, and lower than the potential LST calculations along the Westhampton Reach. All of the previous sediment budget formulations have used estimates of net LST at Fire Island Inlet to either determine (RPI 1983) or provide a checkpoint (Kana 1995, and this study) for the budget. It is believed that estimates of net LST based on impoundment may be too high to characterize existing conditions, due to other contributing processes (e.g., ebb shoal welding) and change in the impounded shoreline position to one more parallel with incoming waves. Estimates of net LST at Fire Island Inlet based on dredging must consider the gross transport components of sand entering the inlet both from Fire Island and Gilgo Beaches.

This study used estimates of net LST based on an analysis of Democrat Point spit growth, which resulted in lower net LST rates at Fire Island than previously reported. The differences between potential LST calculations and the regional sediment budget, especially apparent in the Westhampton Reach (see Fig. 6), indicate that the littoral system may have had a deficit of material for this barrier during the 1979 to 1995 period.

EVALUATION OF A LITTORAL SOURCE OFFSHORE OF FIRE ISLAND

Several researchers have postulated that the inner shelf, and/or shoals offshore of central Fire Island may provide a source of littoral material for the beaches west of this location. The foundation for their reasoning is based on several observations:

- The relative stability of central Fire Island over the past 1200 years, as compared to the remainder of the barrier island (Kana 1995, Schwab 1999).
- The presence of shoreface-attached sand ridges and the availability of littoral sediments offshore of central Fire Island (Williams and Morgan 1993, Schwab 1999).
- The net LST rate at Fire Island Inlet as calculated by previous sediment budgets which ranges from 240,000 (RPI 1983) to 360,000 m^3/yr (Kana 1995) as compared to an accepted net LST rate east of Fire Island Inlet up to 460,000 m^3/yr (Taney 1961a).

The impact of including an offshore source of littoral sediment was evaluated as a part of this study by adding a source along Fire Island from Stations 14.8 (Point of Woods) to 28.0 km (west of Watch Hill). The onshore source of littoral material was assumed to increase the net LST rate within the region west of the source. An offshore source equal to 75,000 m^3/yr results in net LST rate estimates which agree with the maximum estimate for growth of Democrat Point (238,000 m^3/yr) and agreeing with Taney's (1961a,b) estimates. A source of 160,000 m^3/yr results in net LST rates that exceed the spit analysis standard deviation value, but agrees with Taney's "best" estimate (344,000 m^3/yr). The highest value exceeds the Democrat Point analysis, but is lower than Taney's highest estimate. Thus, the source of offshore sediment to Fire Island beaches appears to be a possible contributing factor to the nearshore sediment budget, although the regional sediment budget presented herein indicates that it is not required.

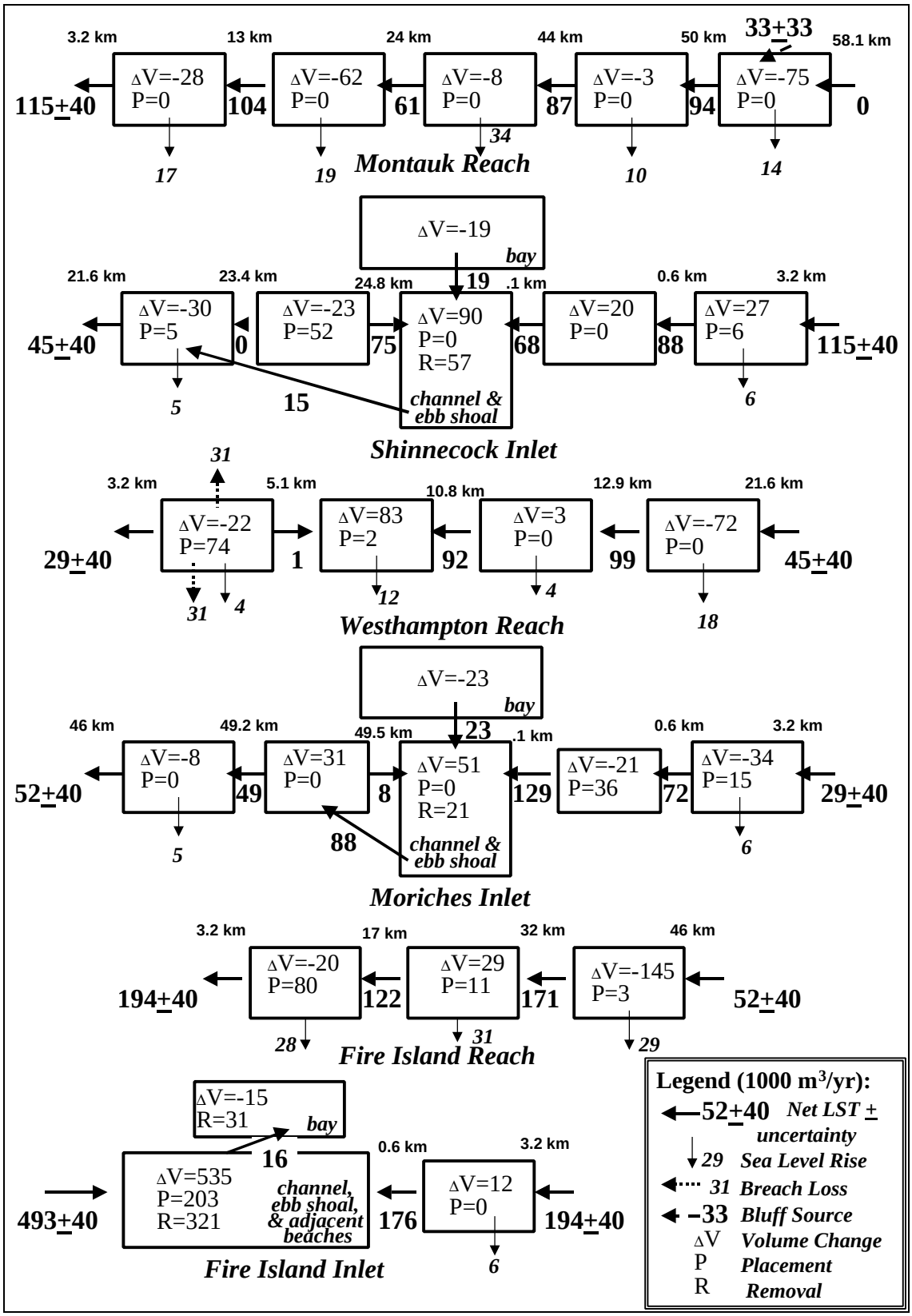

Fig. 5. Regional sediment budget (values for barrier islands based on 1979 to 1995 and 1983 to 1995 data).

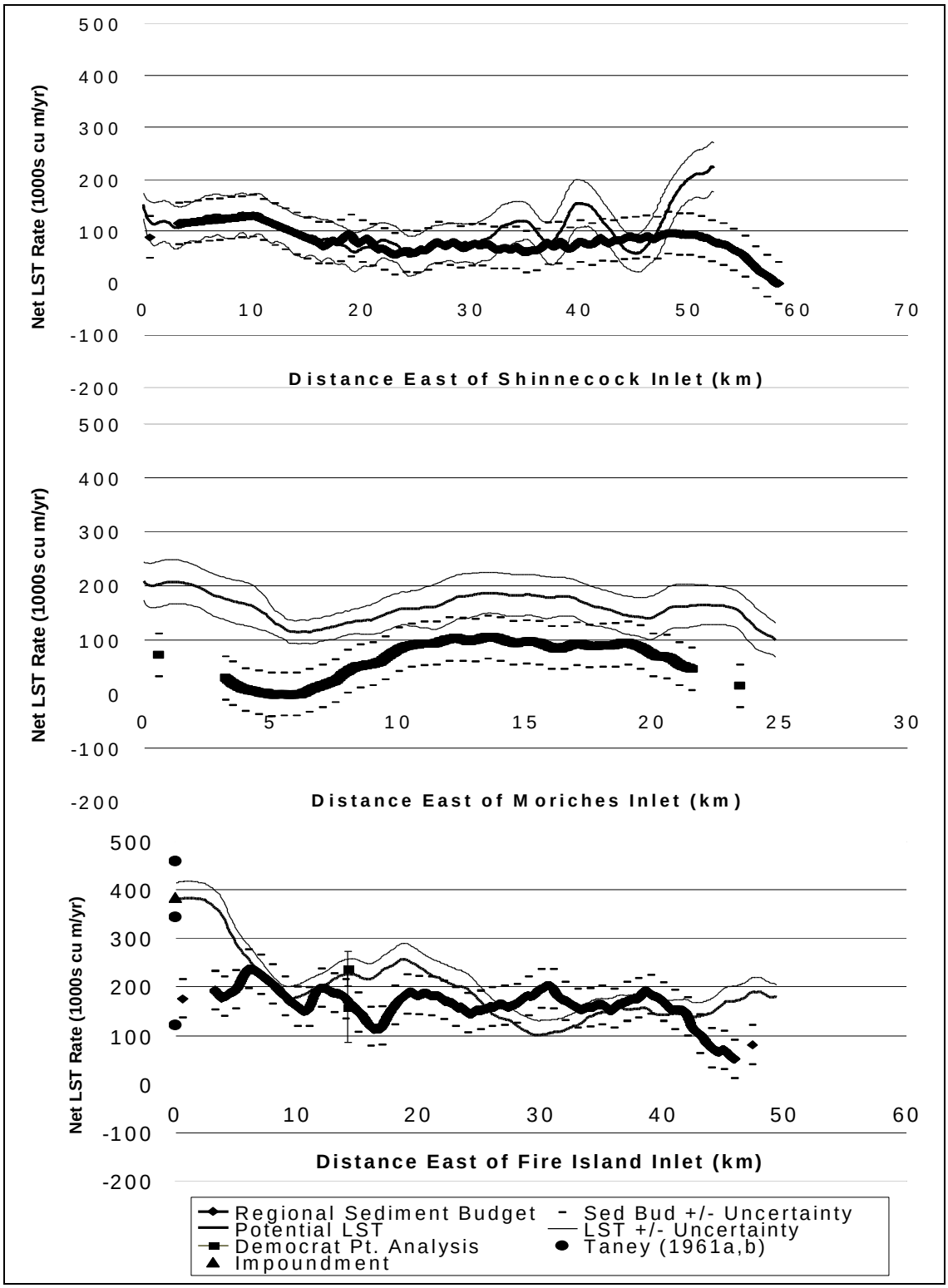

Fig. 6. Net LST rates from regional sediment budget and potential net LST calculations.

CONCLUSIONS

The regional sediment budget provides estimates of net LST rates, engineering activities (beach fill placement and dredging), and sources and sinks representative of the Fire Island to Montauk Point study area. These sediment budgets fall within accepted ranges of net LST rates as derived by previous researchers and as calculated through independent analyses herein. The lower magnitude in the net LST rate appears to better represent processes for this study area for the 1979 to 1995 period.

Beach fill placement (and/or transfer of littoral material to adjacent beaches) is an important mechanism in maintaining the study area beaches. The majority of the beach fill placement most likely occurs through dredging of the inlets and bays, and placement on the adjacent beaches, in effect, a mechanical bypassing (or backpassing) mechanism. From 1933 to 1979 and 1979 to 1995, the cumulative rate of beach fill placed from Montauk Point to Fire Island was 295,000 and 309,000 m^3/yr, respectively. Estimating that only 25-percent of fills placed to close breaches reflects an alongshore movement of littoral material reduced the 1979 to 1995 value to 208,000 m^3/yr. Similar values for the 1979 to 1997 time period are 468,000 (total fill) and 357,000 m^3/yr (adjusted for breach fill). These rates of beach fill placement are of the same order as estimates of the net LST rate at Fire Island Inlet (compare Table 1 and Fig. 3). On a regional scale, future projects must maintain this nourishment rate to preserve present-day beach conditions.

Shoals and the inner shelf offshore of central Fire Island have been postulated by other researchers as a required source for solving the regional sediment budget. The sediment budget formulated herein, and previous sediment budgets for this region do not require an offshore source to formulate net LST rates within the accepted range. However, incorporation of estimates ranging from 75,000 to 160,000 m^3/yr for the offshore source also agree with the accepted range for net LST at Fire Island Inlet. It is concluded that a source of sediment offshore of central Fire Island may exist, although the forcing mechanism is unknown.

ACKNOWLEDGEMENTS

Ms. Julie Rosati and Mr. Mark Gravens acknowledge permission granted by the Headquarters, U.S. Army Corps of Engineers, to publish this paper developed under the Fire Island to Montauk Point Reformulation Study, and the Coastal Inlets Research Program, Inlet Channels and Adjacent Shorelines Work Unit. We are grateful for review of this document by Mr. Keith Watson, U.S. Army Corps of Engineers, New York District, and Mr. Bruce Ebersole, U.S. Army Corps of Engineers Coastal and Hydraulics Laboratory (CHL). The kind assistance of Dr. Andrew Morang, CHL, in preparing Fig. 1 is appreciated.

REFERENCES

Bruun, P. 1962. "Sea Level Rise as a Cause of Shore Erosion, Journal of Waterways and Harbors Division, ASCE, 88:117-130.

Gravens, M.B., Rosati, J.D., and Wise, R.A. 1999. "Fire Island Inlet to Montauk Point Reformulation Study (FIMP): Historical and Existing Condition Coastal Processes Assessment," prepared for the U.S. Army Engineer District, New York.

Heikoff, J. M. 1976. "Politics of Shore Erosion: Westhampton Beach," Ann Arbor Science Publishers, Ann Arbor, MI.

Jarrett, J.T. 1991. "Coastal Sediment Budget Analysis Techniques," Proceedings, Coastal Sediments '91, ASCE, New York, NY, pp. 2223-2233.

Kana, T. W. 1995. "A mesoscale sediment budget for Long Island, New York," *Marine Geology*, Vol 126, pp. 87-110.

Kraus, N.C., and Rosati, J.D. 1999. "Uncertainty in Inlet Sediment Budgets," *Proceedings*, Florida Shore and Beach Preservation Association, Tallahassee, FL, in press.

Leatherman, S.P. and Allen, J.R. (Editors). 1985. "Geomorphic analysis of the south shore barriers of Long Island, New York, Technical Report, National Park Service, Boston, Massachusetts, 350 p.

Leatherman, S.P. and Joneja, D. C. 1980. "Geomorphic analysis of south shore barriers, Long Island, New York: phase I," Final Report, NPS, Cooperative Research Institute, University of Massachusetts, Amherst, 168 p.

Moffatt & Nichol Engineer and URS Consultants, Inc. 1999. "Storm Damage Reduction Reformulation Study, Inlet Dynamics – Existing Conditions," prepared for the U.S. Army Engineer District, New York.

Research Planning Institute. 1983. "Sediment Budget Summary, Final Report for the Reformulation Study," Beach Erosion Control and Hurricane Protection Project, Fire Island Inlet to Montauk Point for U.S. Army Engineer District, New York, 85 p.

Shalowitz, A. L. 1962. "Shore and sea boundaries; Vol 2, Interpretation and use of coast and geodetic survey data," Publication 10-1, U.S. Dept. of Commerce, Coast and Geodetic Survey, 749 p.

Schmeltz, E. J., and McCarthy, M.J. 1982. "Breach/Inlet Interaction at Moriches Inlet," *Proceedings*, International Coastal Engineering Conference, ASCE, New York, NY, pp 1062-1077.

Schwab, W. C., Thieler, E. R., Allen, J. R., Foster, D. S., Swift, B. A., and Denny, J. F. 1999. "Geologic Mapping of the Inner Continental Shelf off Fire Island, New York: Implications for Coastal Evolution and Behavior," *Proceedings*, Coastal Sediments '99, ASCE, New York, NY.

Shore Protection Manual. 1984. 4th Ed., 2 vols., U.S. Government Printing Office, Washington, D.C.

Taney, N.E. 1961a. "Geomorphology of the South Shore of Long Island, New York," Technical Memorandum 128, U.S. Army Corps of Engineers, Beach Erosion Board, Washington, D.C., 97 p.

Taney, N.E. 1961b. "Littoral Materials of the South Shore of Long Island, New York," Technical Memorandum 129, U.S. Army Corps of Engineers, Beach Erosion Board, Washington, D.C., 95 p.

Williams, A. T., and Morgan, P. 1993. "Scanning electron microscope evidence for offshore-onshore sand transport at Fire Island, New York, USA," Sedimentology, Vol 40, pp. 63-77.