Overview of Morning Sessions
Sediment Budgets

1.	Sediment Budget Concepts and Methods	8:45-9:15
2.	Types of Sediment Budgets and Level of Analyses	9:15-9:40
3.	Sediment Budget Considerations for LA	9:40-10:00
		Break
4.	Sediment Budget Analysis System (SBAS)	10:20-10:40
5.	Hands-on SBAS	10:40-11:15

Goals…

by the end of the morning, you will know how to:

1. Evaluate sediment budget sources and sinks for LA
2. Analyze data to create a sediment budget
3. Check a sediment budget for ‘fatal errors’
4. Create a sediment budget on paper
5. Create a sediment budget in SBAS

Overview of Morning Sessions
Sediment Budgets

1. Sediment Budget Concepts and Methods	8:45-9:15
2. Types of Sediment Budgets and Level of Analyses	9:15-9:40
3. Sediment Budget Considerations for LA	9:40-10:00
	Break
4. Sediment Budget Analysis System (SBAS)	10:20-10:40
5. Hands-on SBAS	10:40-11:15

1. Sediment Budget Concepts and Methods

What is a sediment budget?

What is a sediment budget?

- An accounting of inputs (“sources”), outputs (“sinks”), and change in sediment volume (ΔV) (usually sand)
- For a defined area (“cell”)
- Within a specified time period

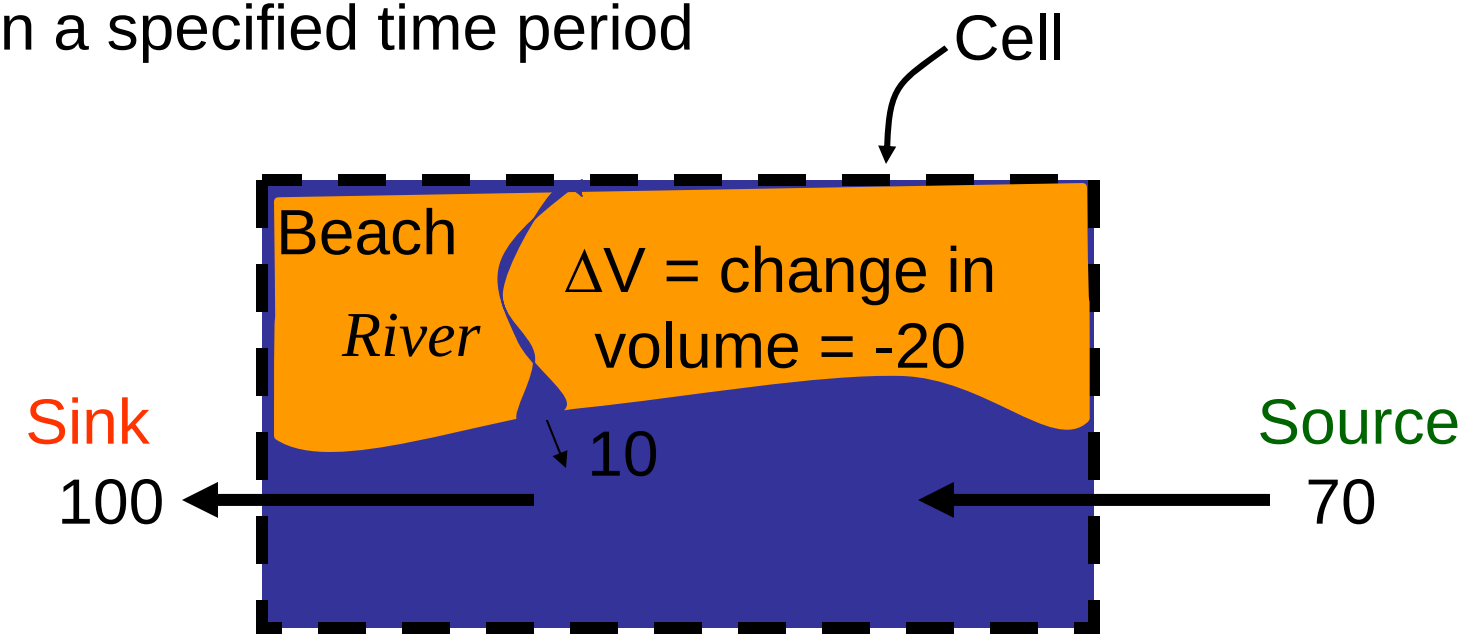

(thousands of cu yd/yr)

Example Sediment Budgets

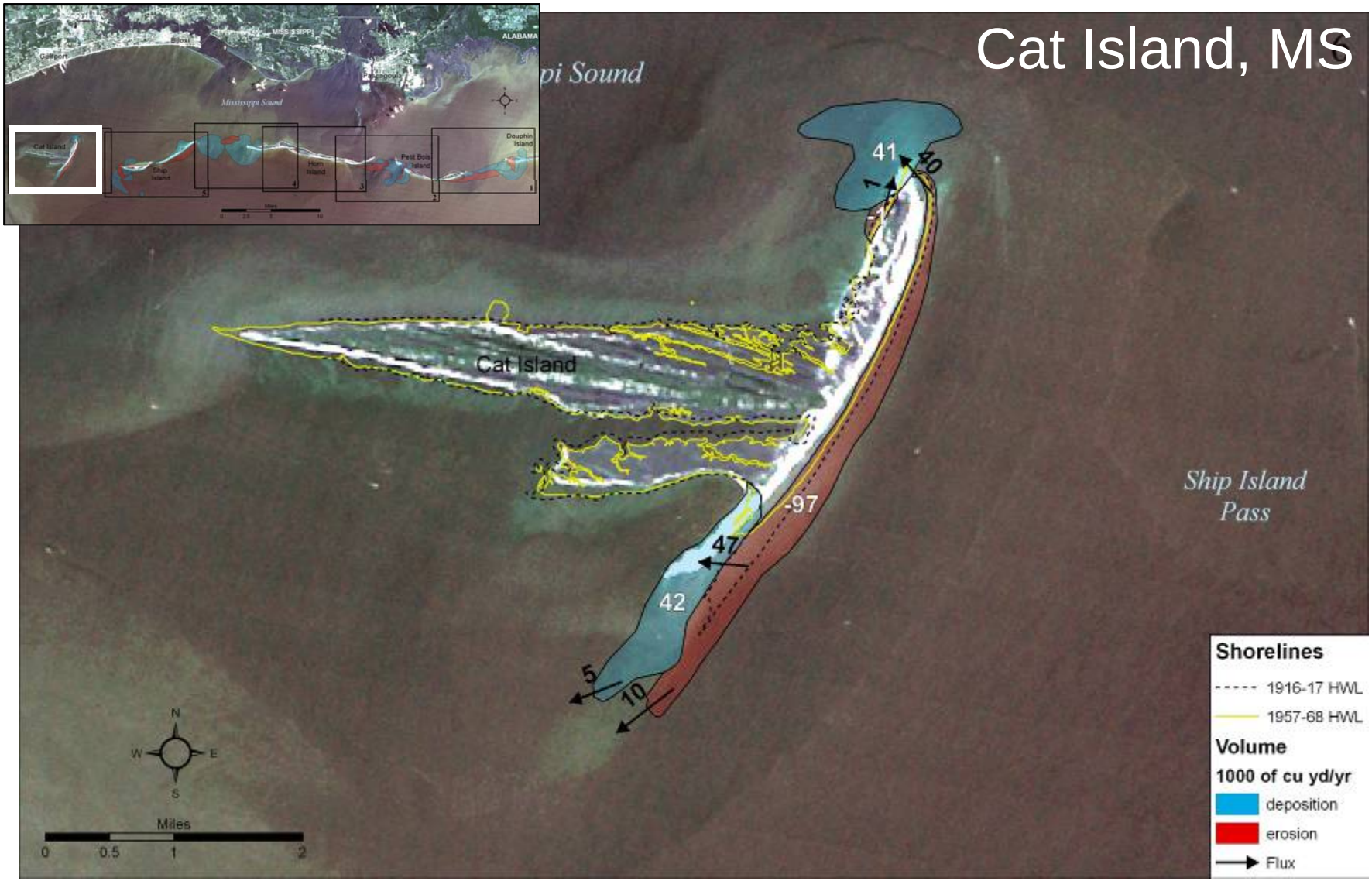

Example Sediment Budgets

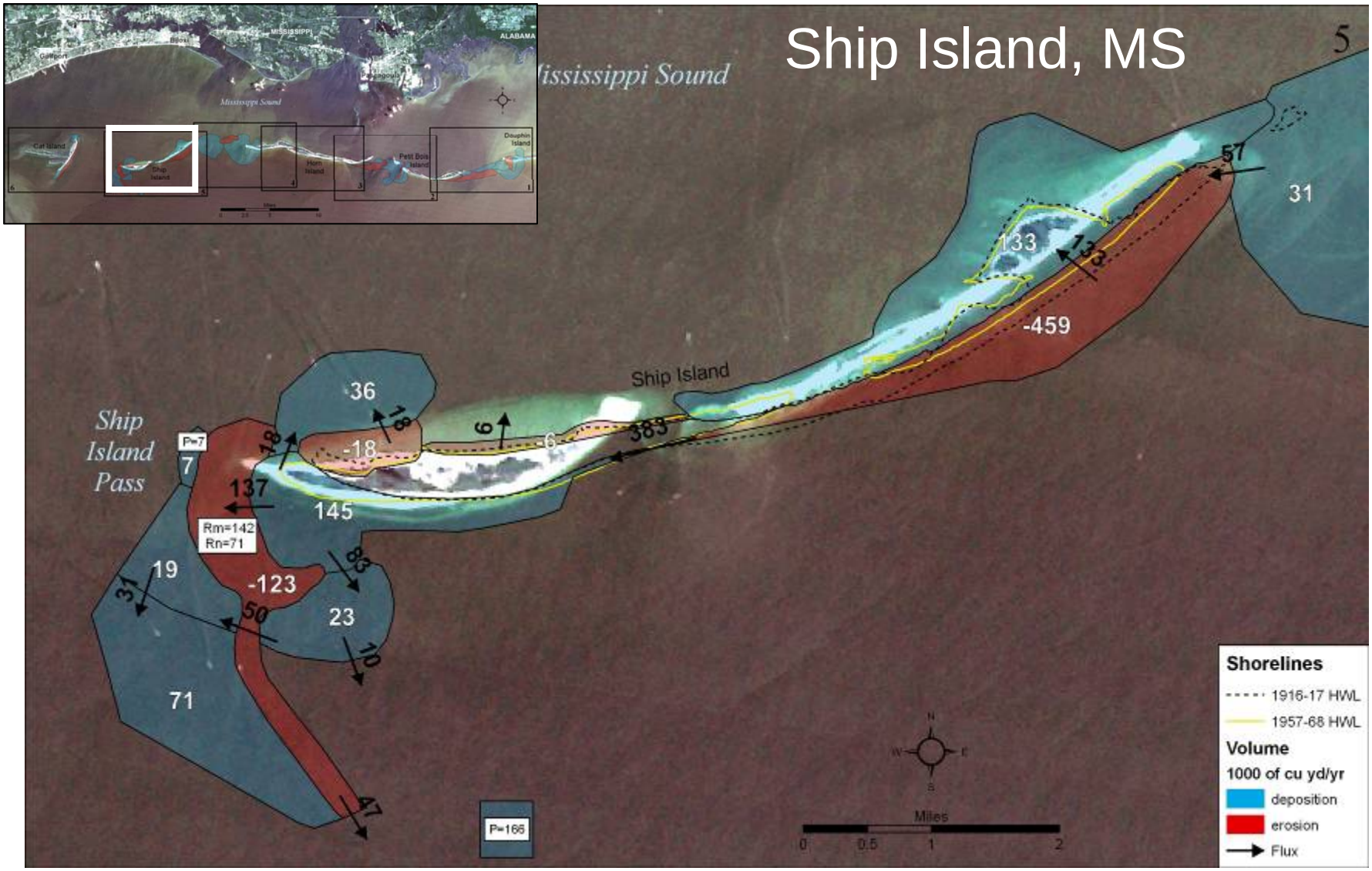

Example Sediment Budgets

Example Sediment Budgets

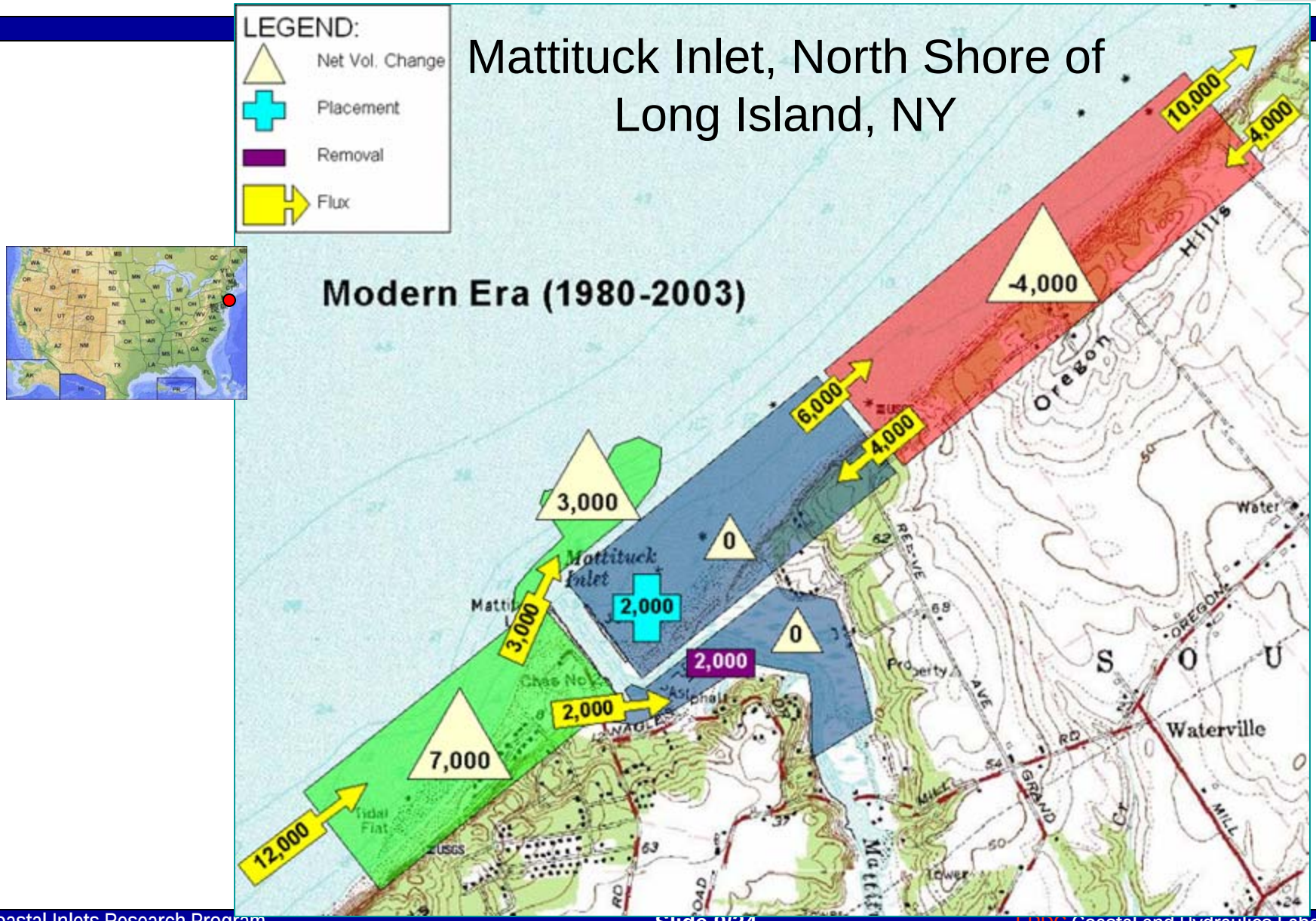

Sediment Budgets…

- Define regional and local patterns and magnitudes of sediment transport
  - For different time periods
  - For different project alternatives
  - For different conditions
- Provide ground-truthing for more detailed modeling
- Tool for communication with clients, sponsors, and partners
- May be applied to determine design criteria and mitigation
  - e.g., renourishment requirements

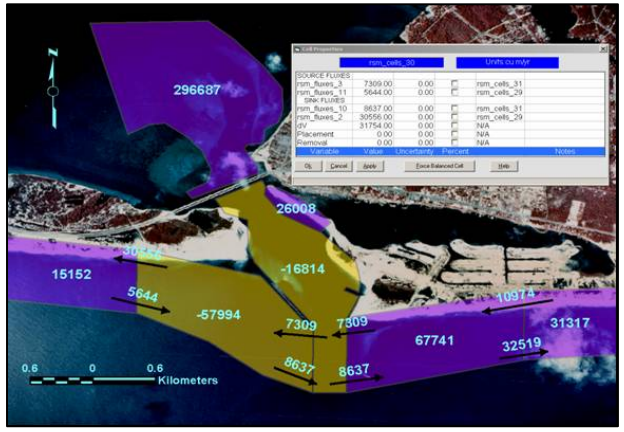

Terminology:
Sediment Budget Equation

$$\Sigma Q_{source} - \Sigma Q_{sink} - \Delta V + P - R = Residual$$

Q_{source} , Q_{sink} = input or export to cell

ΔV = Volume change within cell

P = Placement into cell

R = Removal from cell

Residual = cell surplus or deficit

(= 0 for balanced cell)

Illustration

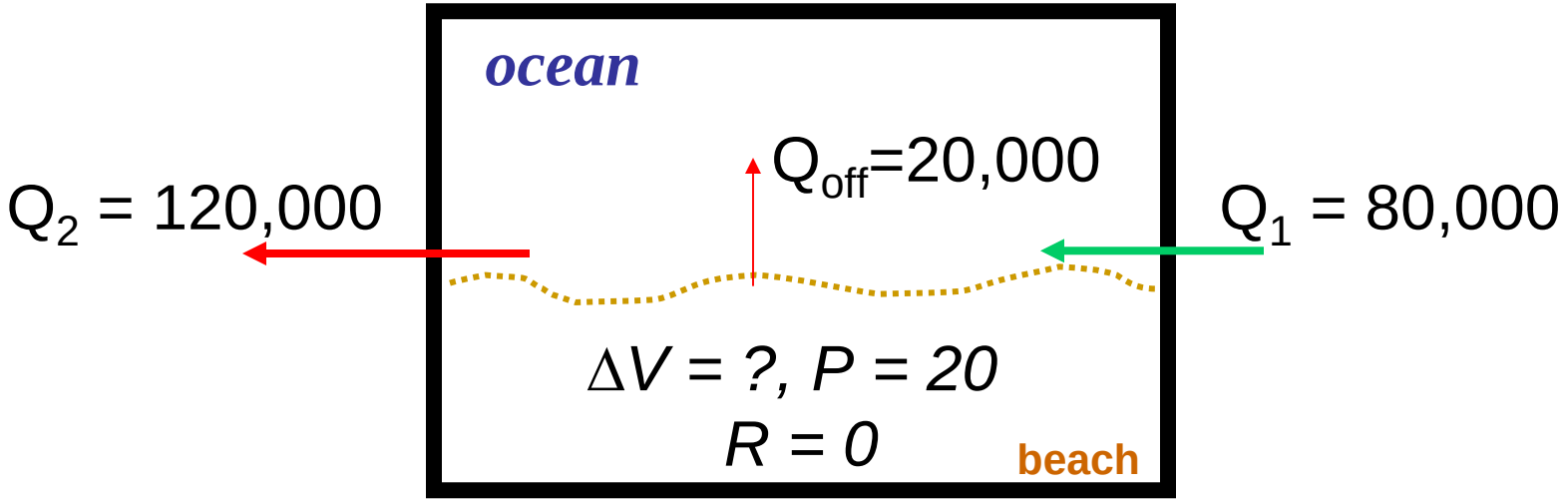

ΣQ_{source}	$-\Sigma Q_{sink}$	$-\Delta V$	$+ P$	$-R$	$= 0$
80	-(120+20)	- (ΔV)	+ 20	- 0	= 0

$$\Delta V = -40{,}000$$

Creating a Sediment Budget

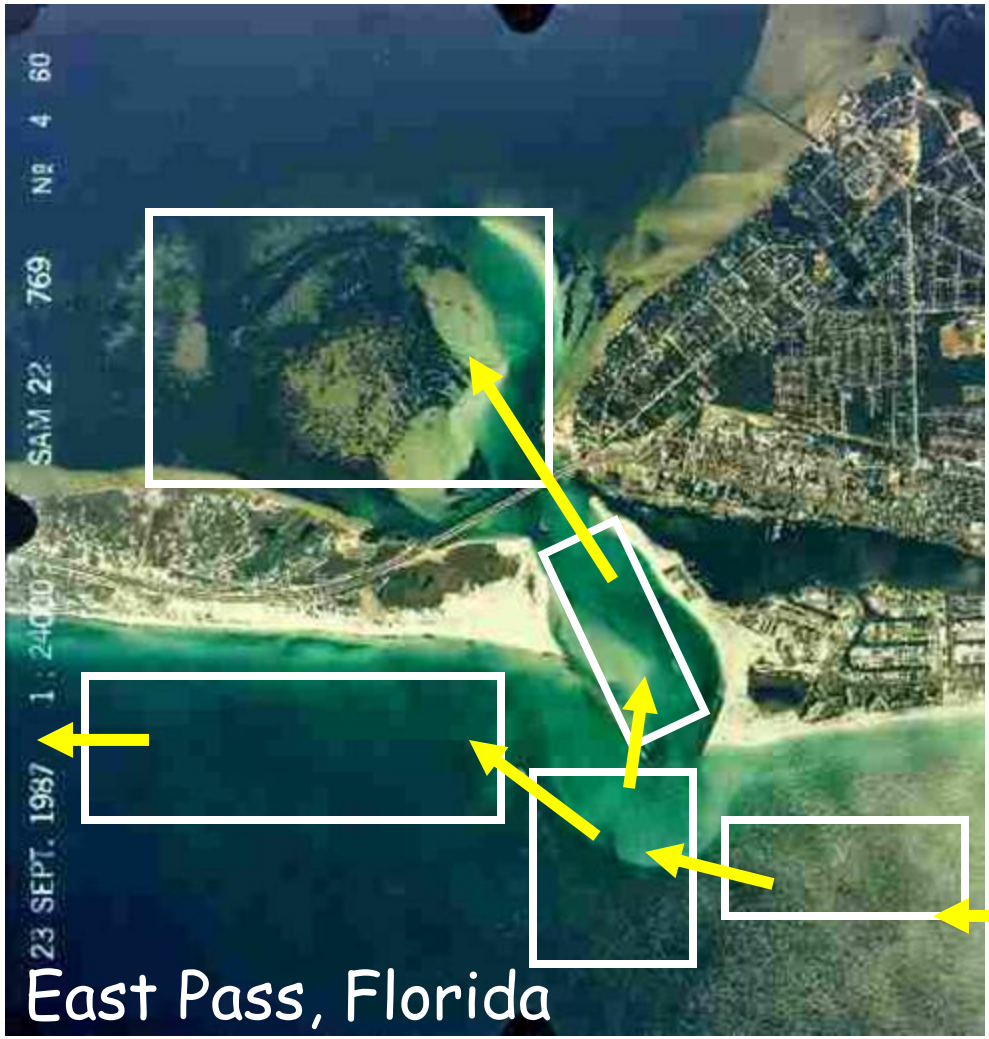

…Literature review and knowledge of site

1. Conceptual budget

…Analyze data

2. Interim budget

…Uncertainty and sensitivity testing

3. Operational budget

Hillsboro Inlet, Florida
Location & Setting

Hillsboro Inlet, Florida
1. Conceptual Sediment Budget

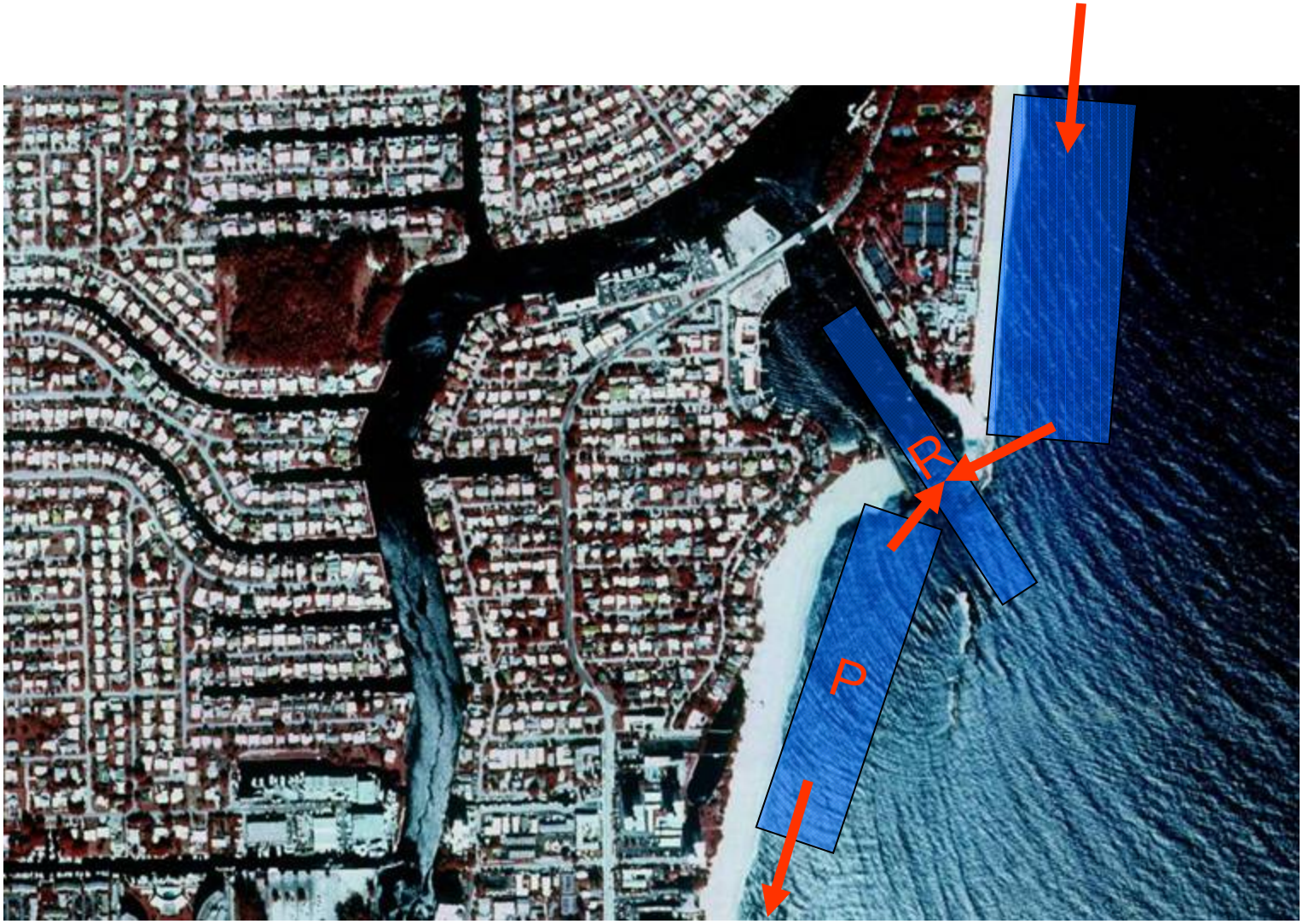

Hillsboro Inlet, Florida
Information from Jacksonville District

120,000 cy/yr is the net longshore sand transport rate updrift of the inlet

54,000 cy/yr is transported over the north jetty weir section into the sediment basin

60,000 cy/yr is deposited into the entrance channel

30,000 cy/yr moves into the inlet from the south

30,000 cy/yr bypasses the inlet naturally (north to south)

4,000 cy/yr lost to deep water on ebb flow

110,000 cy/yr is dredged from the channel and bypassed to the downdrift beach

Hillsboro Inlet, Florida Sediment Budget

120,000 cy/yr is the net longshore sand transport rate updrift of the inlet

54,000 cy/yr is transported over the north jetty weir section into the sediment basin

60,000 cy/yr is deposited into the entrance channel

30,000 cy/yr moves into the inlet from the south

30,000 cy/yr bypasses the inlet naturally (north to south)

4,000 cy/yr lost to deep water on ebb flow

110,000 cy/yr is dredged from the channel and bypassed to the downdrift beach

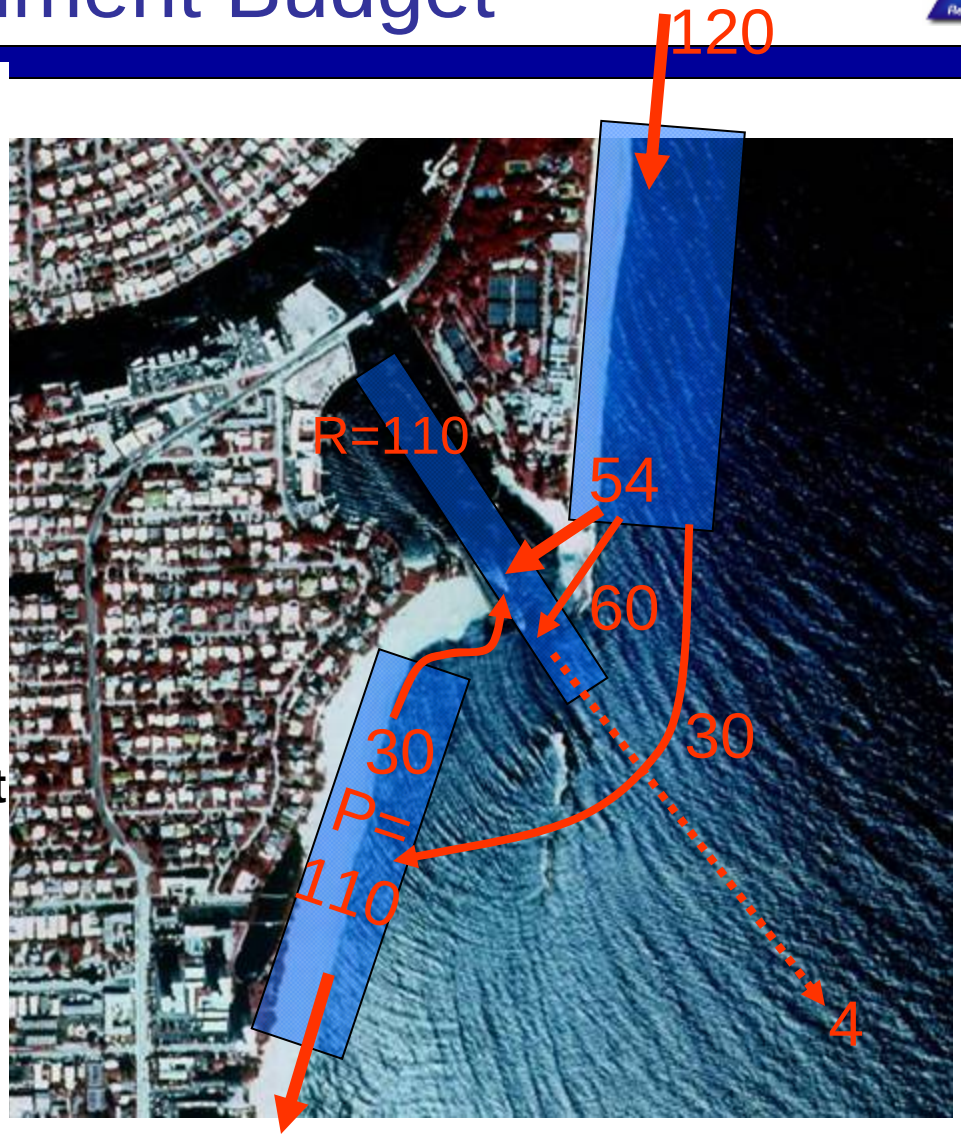

Hillsboro Inlet Sediment Budget

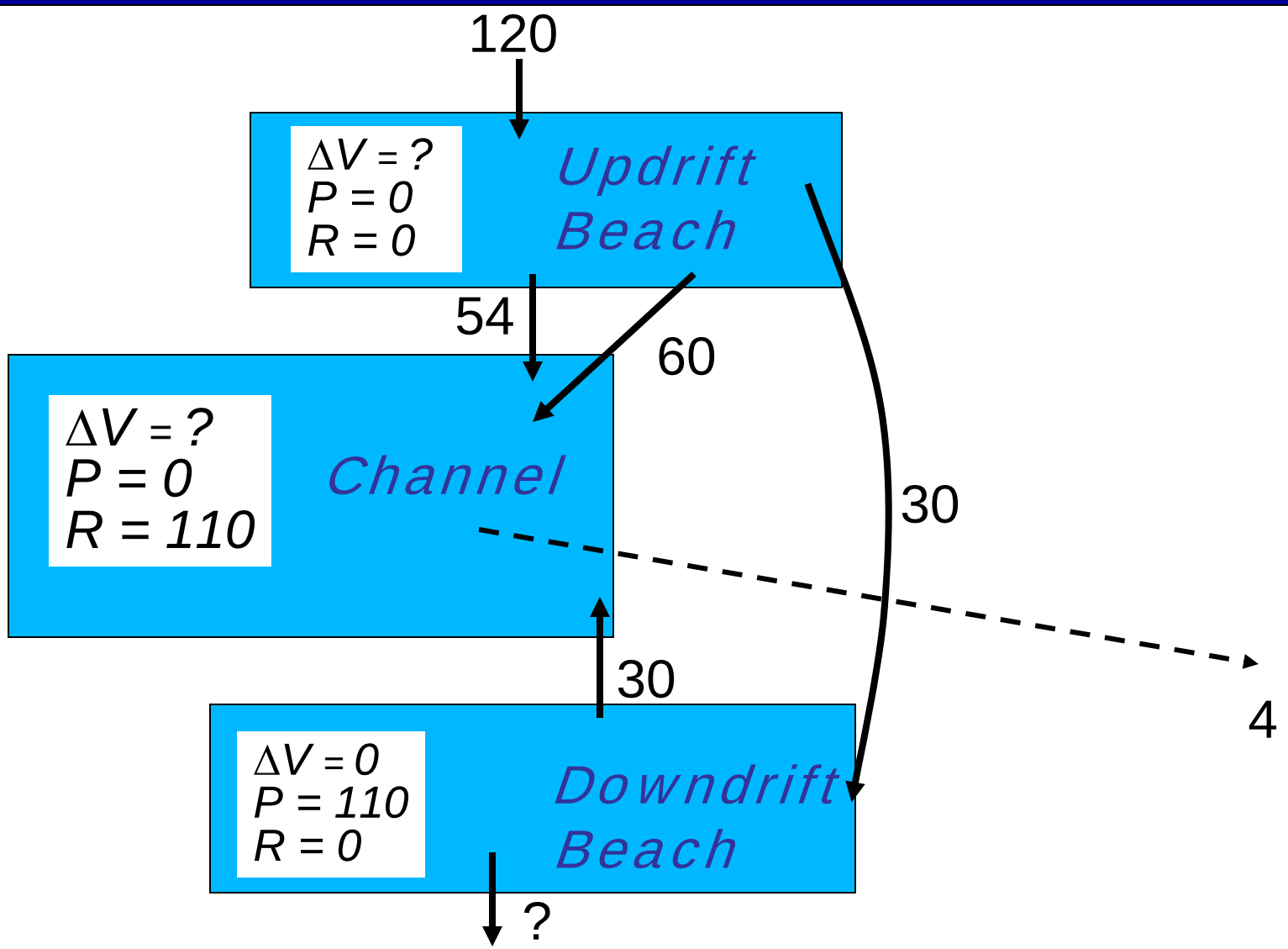

Hillsboro Inlet Sediment Budget:

Updrift Cell

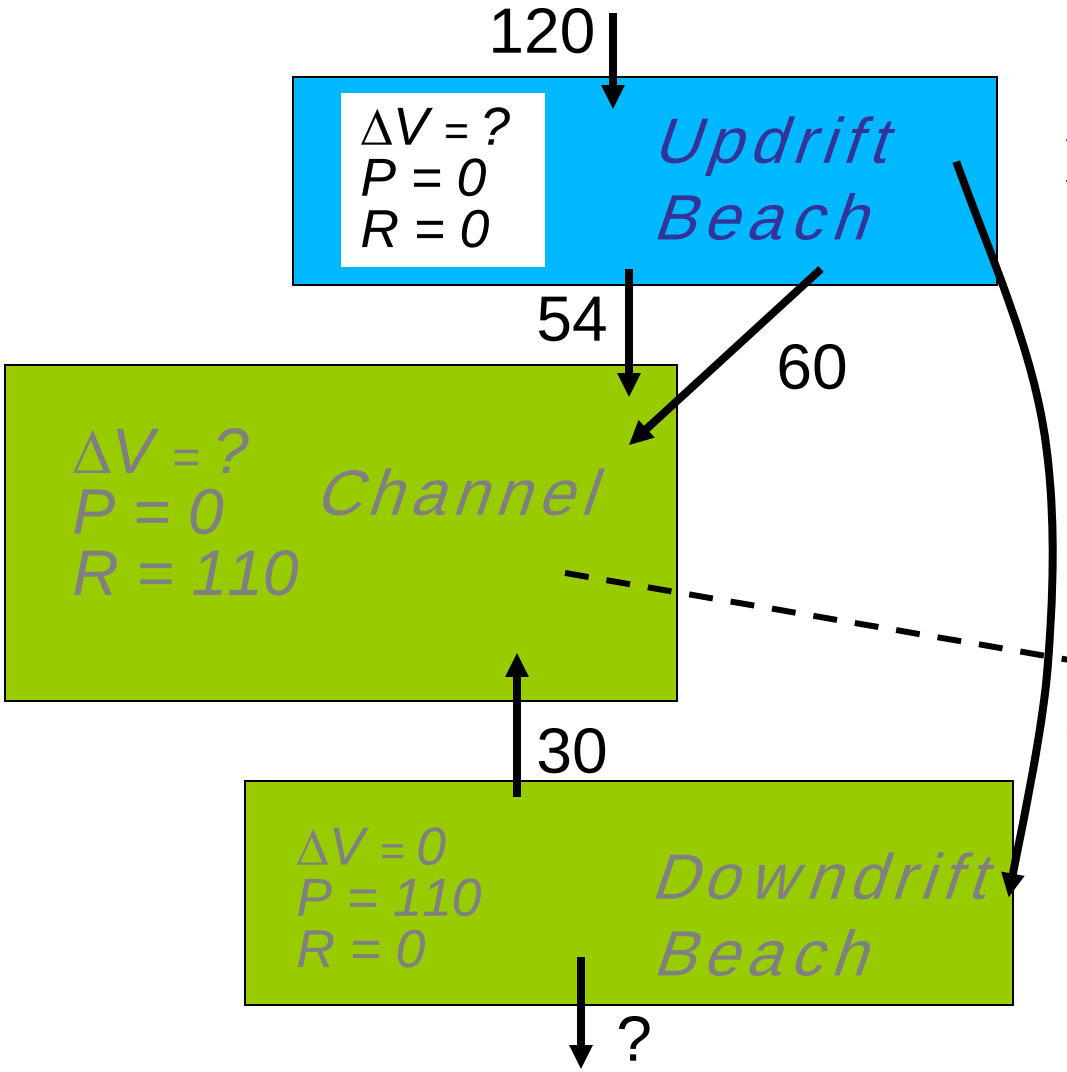

$$\Sigma Q_{source} - \Sigma Q_{sink} - \Delta V + P - R = 0$$

$$120-(54+60+30)-\Delta V+0-0=0$$

$$\rightarrow \Delta V = -24$$

Hillsboro Inlet Sediment Budget:

Channel Cell

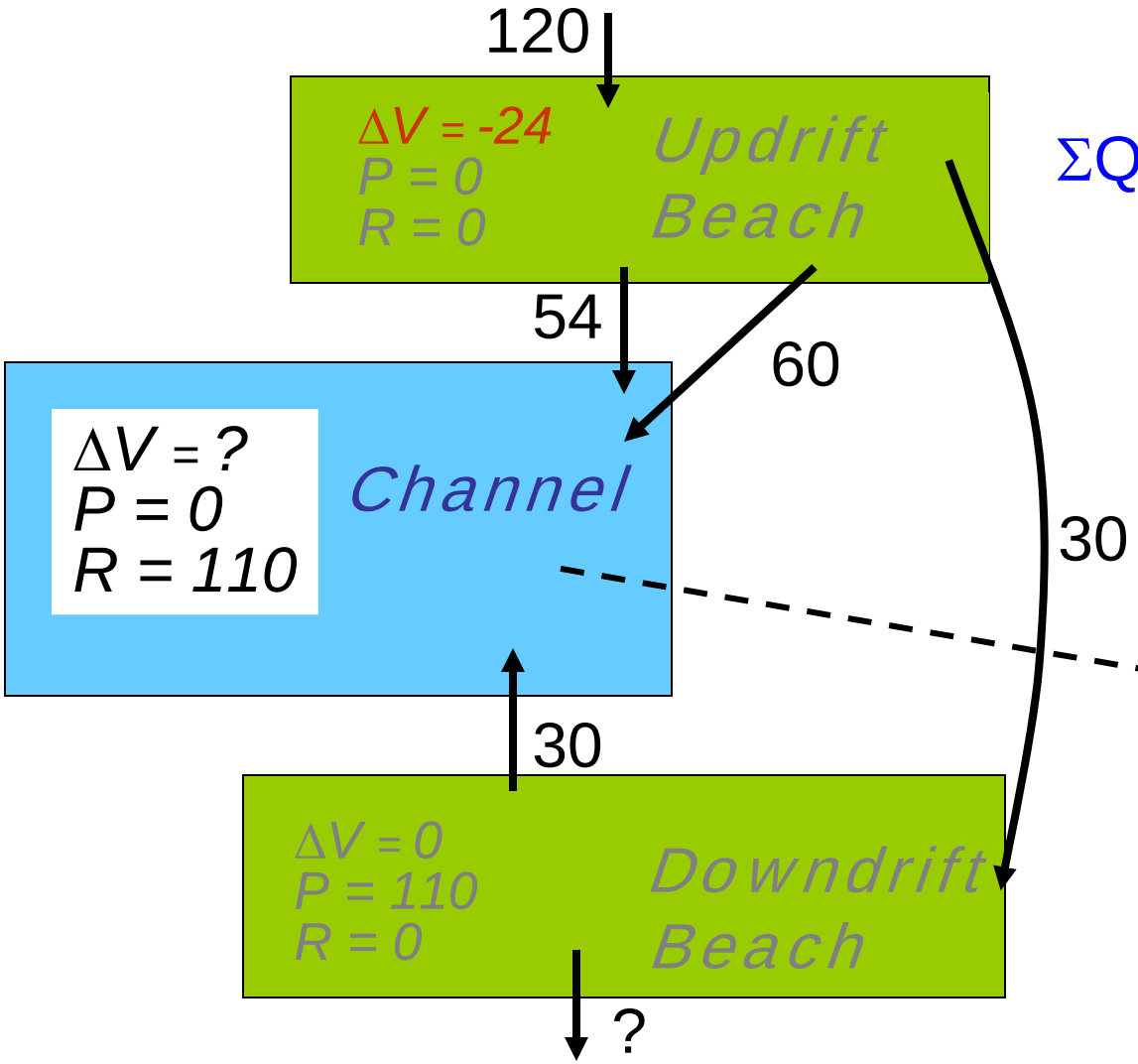

$\Sigma Q_{source} - \Sigma Q_{sink} - \Delta V + P - R = 0$

$(54+60+30)-(4)-\Delta V+0-110=0$

$\rightarrow \Delta V = 30$

Hillsboro Inlet Sediment Budget:

Downdrift Cell

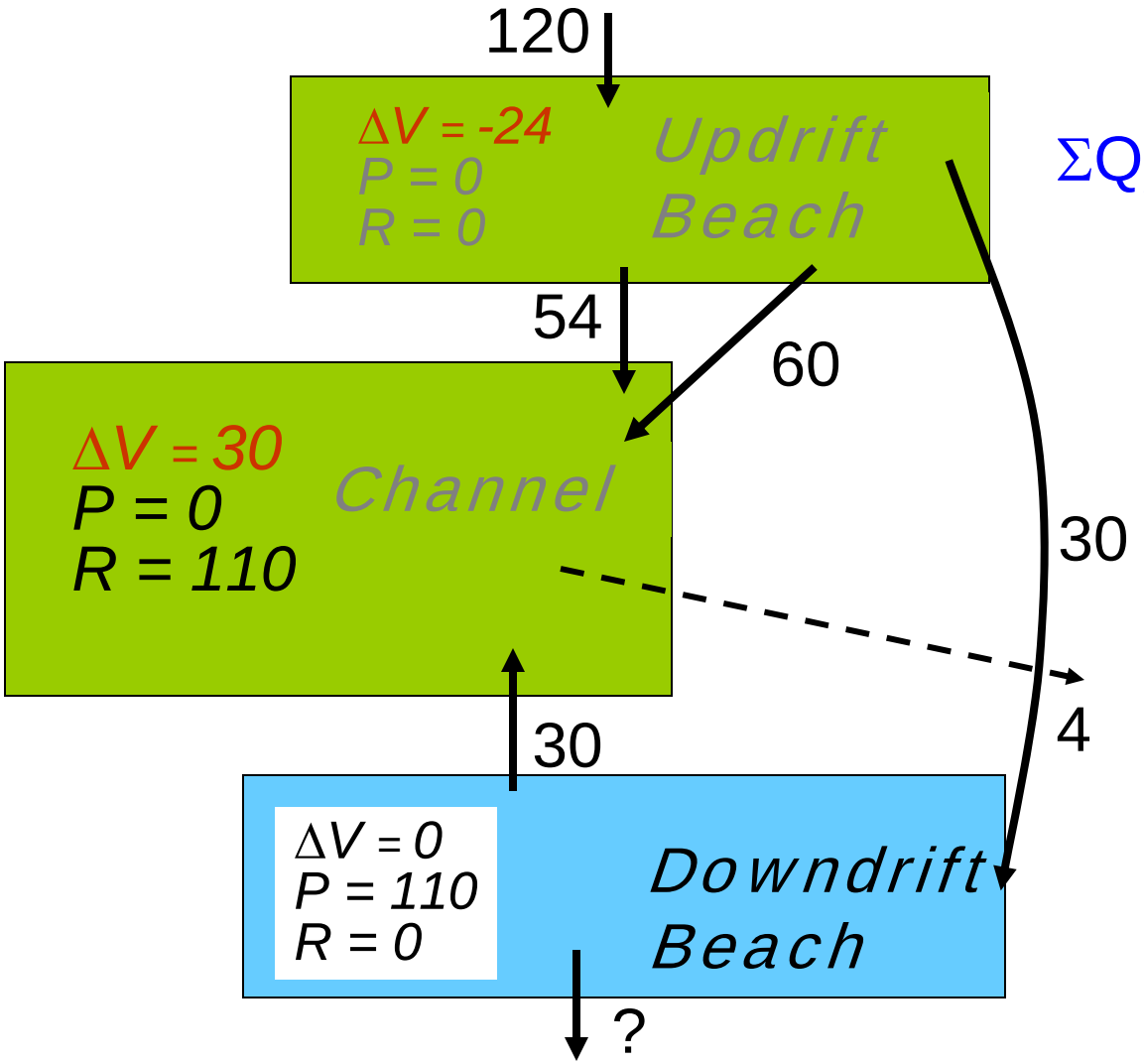

$\Sigma Q_{source} - \Sigma Q_{sink} - \Delta V + P - R = 0$

$(30)-(30+Q_{out})-0+110-0=0$

$\rightarrow Q_{out} = 110$

Hillsboro Inlet Sediment Budget:

Downdrift Cell

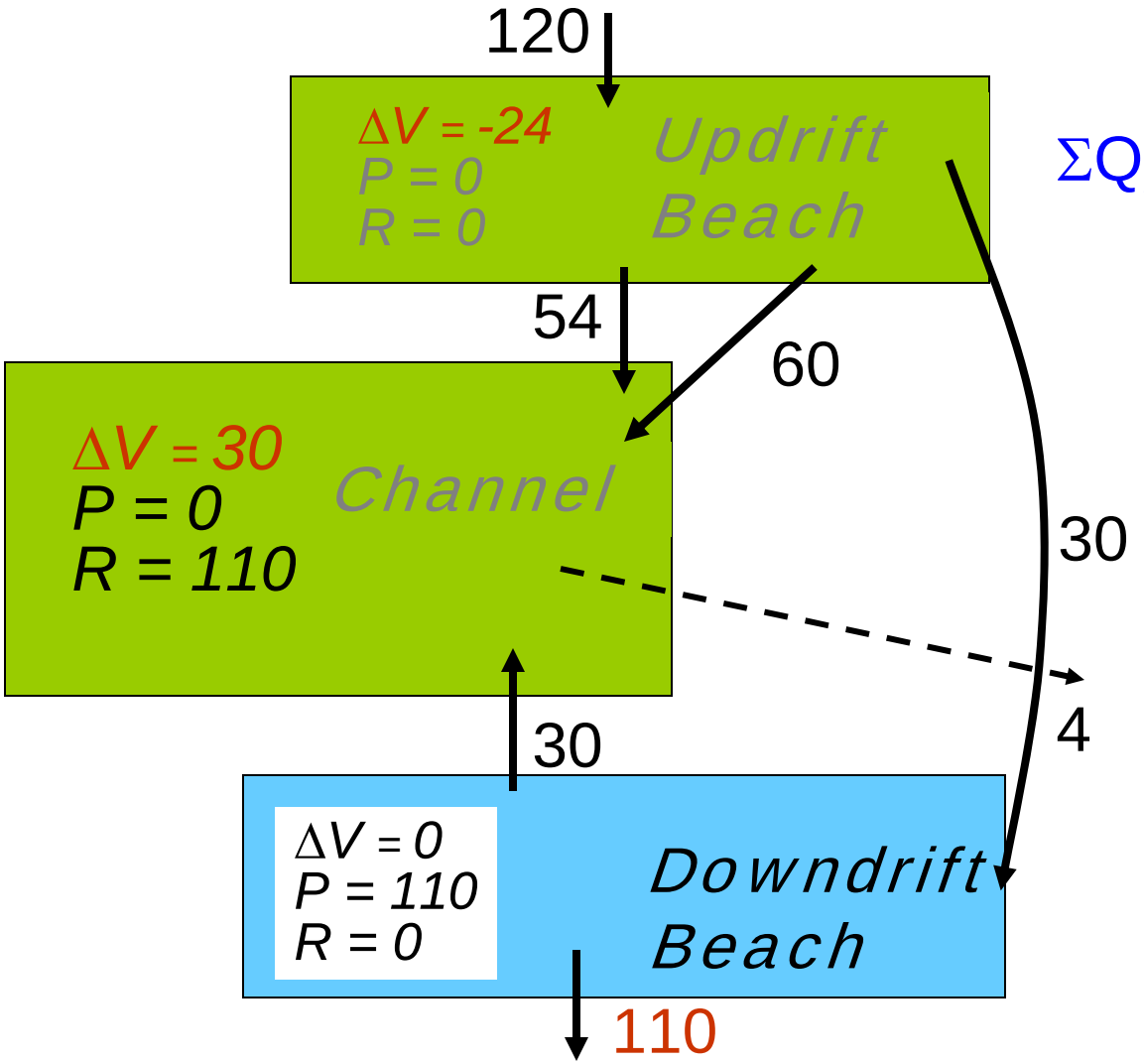

$\Sigma Q_{source} - \Sigma Q_{sink} - \Delta V + P - R = 0$

$(30)-(30+Q_{out})-0+110-0=0$

$\rightarrow Q_{out} = 110$

Hillsboro Inlet Sediment Budget:

Macrobudget

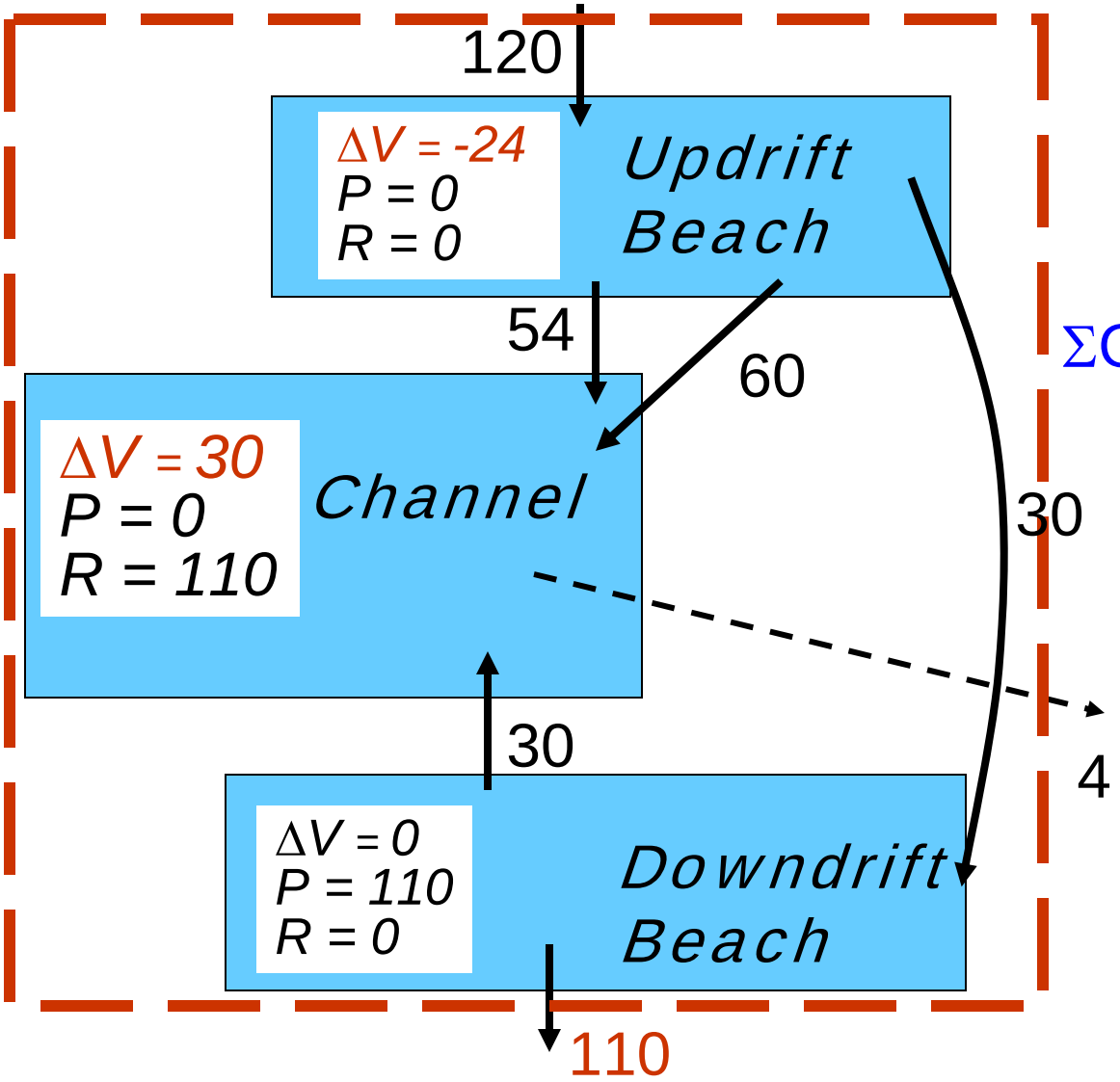

Macrobudget:
Budget of all cells

$$\Sigma Q_{source} - \Sigma Q_{sink} - \Delta V + P - R = 0$$

(120)-(110+4)-(-24+30+0)+(110)-(110)=0

Checks correctly!

Summary

- We use sediment budgets for a range of applications
  - Simple: communication/illustration tool
  - Detailed: determine design elements
  - May be many budgets to characterize a particular coastal setting
- Steps in formulating a sediment budget:
  1. Conceptual budget (quickly formulated, use available information)
  2. Working budget (analyze data, new modeling, sensitivity testing)
  3. Final budget(s)
- Important concepts:
  - Macro-budget – provides a check on calculations
  - Residuals – should be zero for balanced budget, but can carry residuals to illustrate problems with data or lack of available information
- SBAS – tool useful for:
  - Communications – free to all partners, easily share files
  - Check on algebra
  - Keeping track of various budgets and data