Overview of Morning Sessions
Sediment Budgets

1.	Sediment Budget Concepts and Methods	8:45-9:15
2.	Types of Sediment Budgets and Level of Analyses	9:15-9:40
3.	Sediment Budget Considerations for LA	9:40-10:00
		Break
4.	Sediment Budget Analysis System (SBAS)	10:20-10:40
5.	Hands-on SBAS	10:40-11:15

Class Exercise 1: Shoreline Change Data

Point	SLC (m/yr)
1	0.5
2	0.5
3	0.7
4	0.6
5	0.8
6	1
7	0.2
8	-0.5
9	-0.8
10	-1
11	-1.2
12	-1.1
13	-0.9
14	-0.2

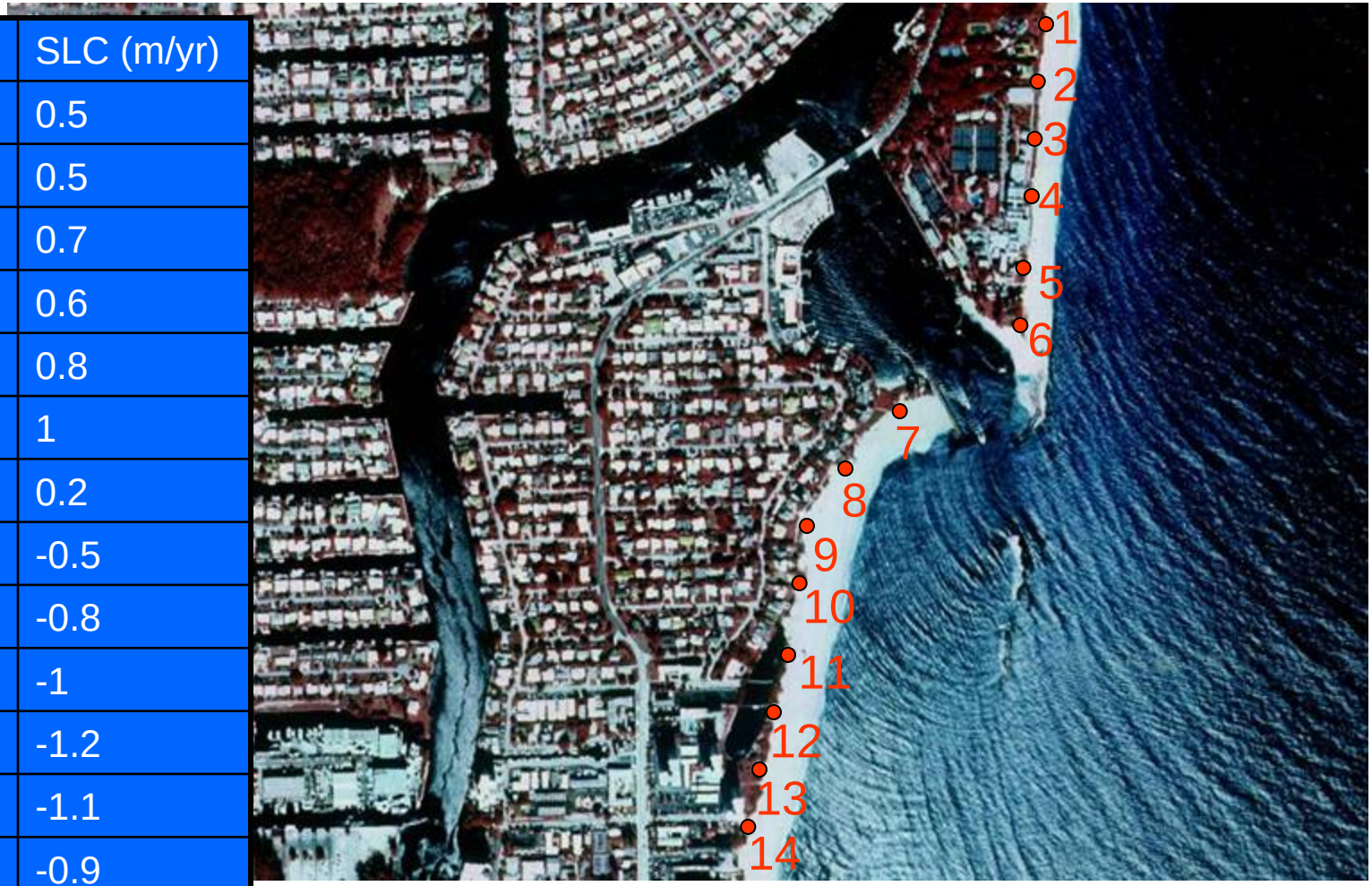

Hillsboro Inlet image

Program Files/SBAS/Data “hb_950126.jpg”

Class Exercise 2: Detailed Budget

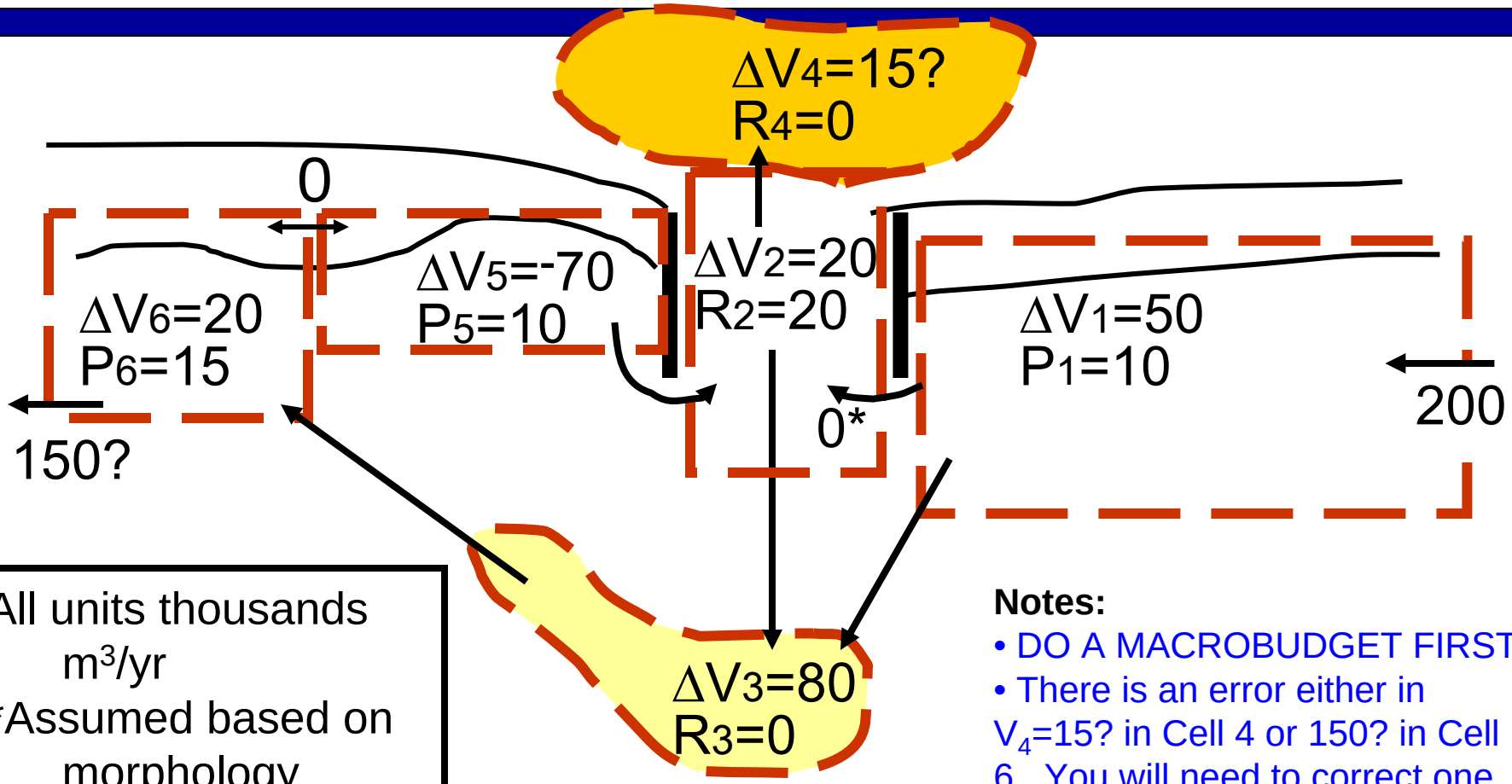

All units thousands m^3/yr
*Assumed based on morphology

Notes:
- DO A MACROBUDGET FIRST.
- There is an error either in V_4=15? in Cell 4 or 150? in Cell 6. You will need to correct one of these before you can complete the budget.

$$\Sigma Q_{source} - \Sigma Q_{sink} - \Delta V + P - R = 0$$

Shinnecock Inlet, NY

Import Image “Shinnecock Inlet 4-22-97.jpg”

Create budget on top of image