Sediment Budget Solution

Katie Brutsché

Coastal Engineering PROSPECT Course
Lesson 10

February 27, 2018

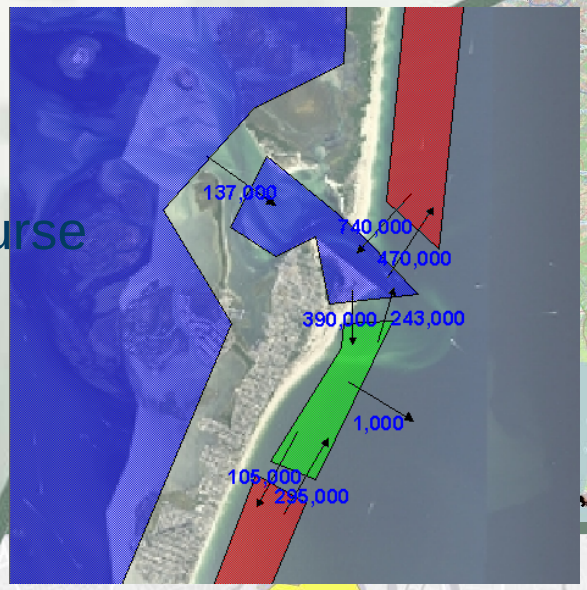

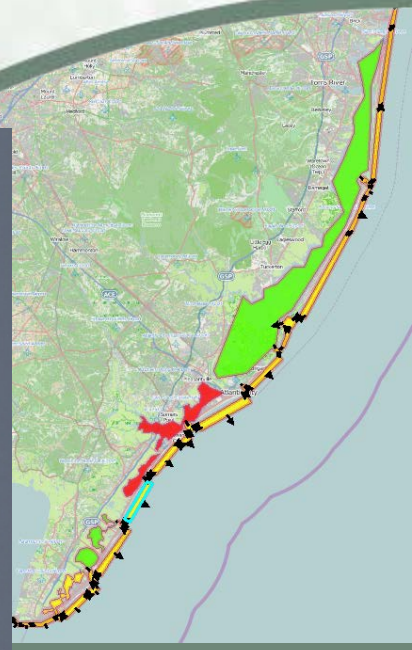

One Solution

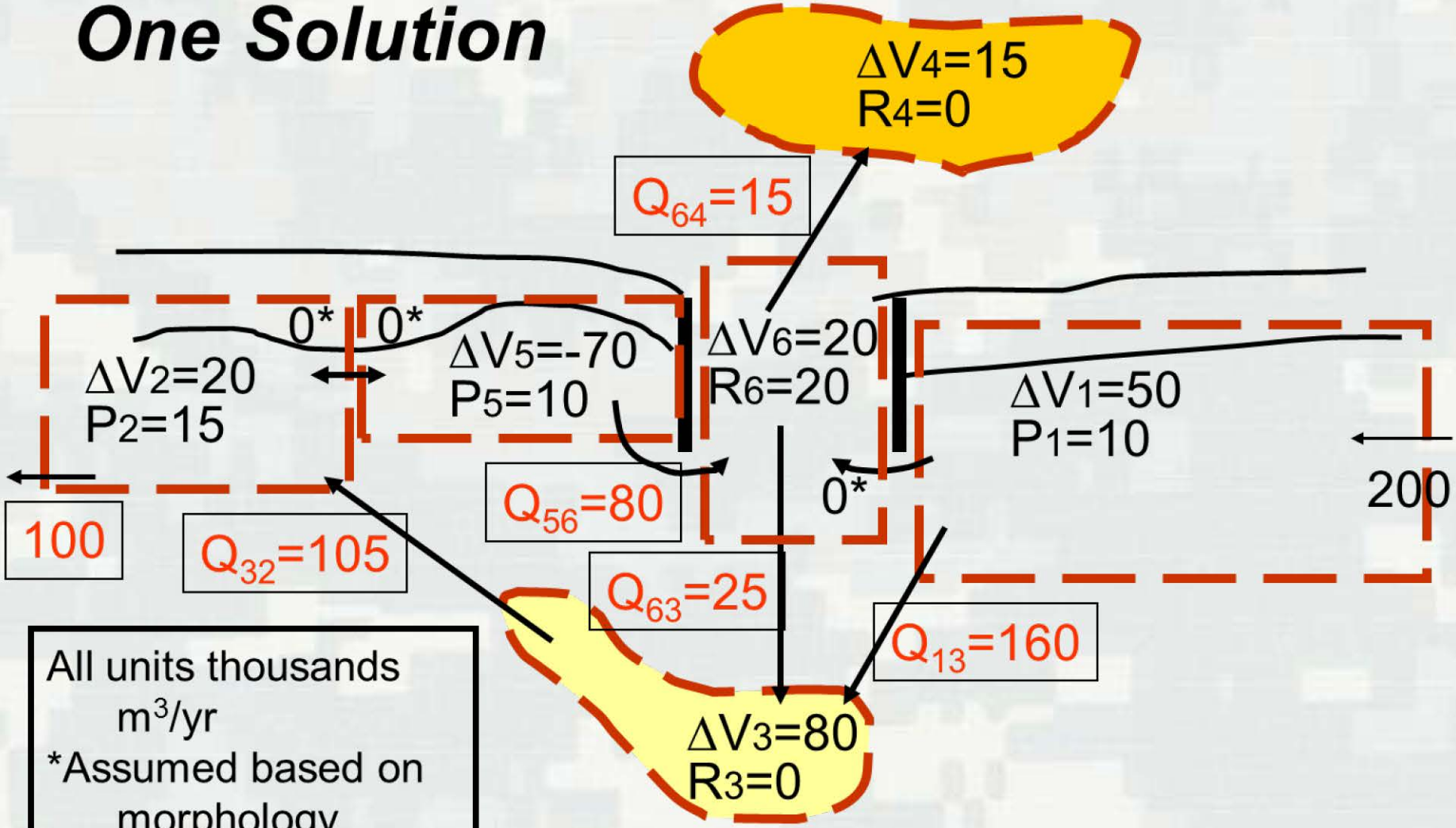

All units thousands m^3/yr
*Assumed based on morphology

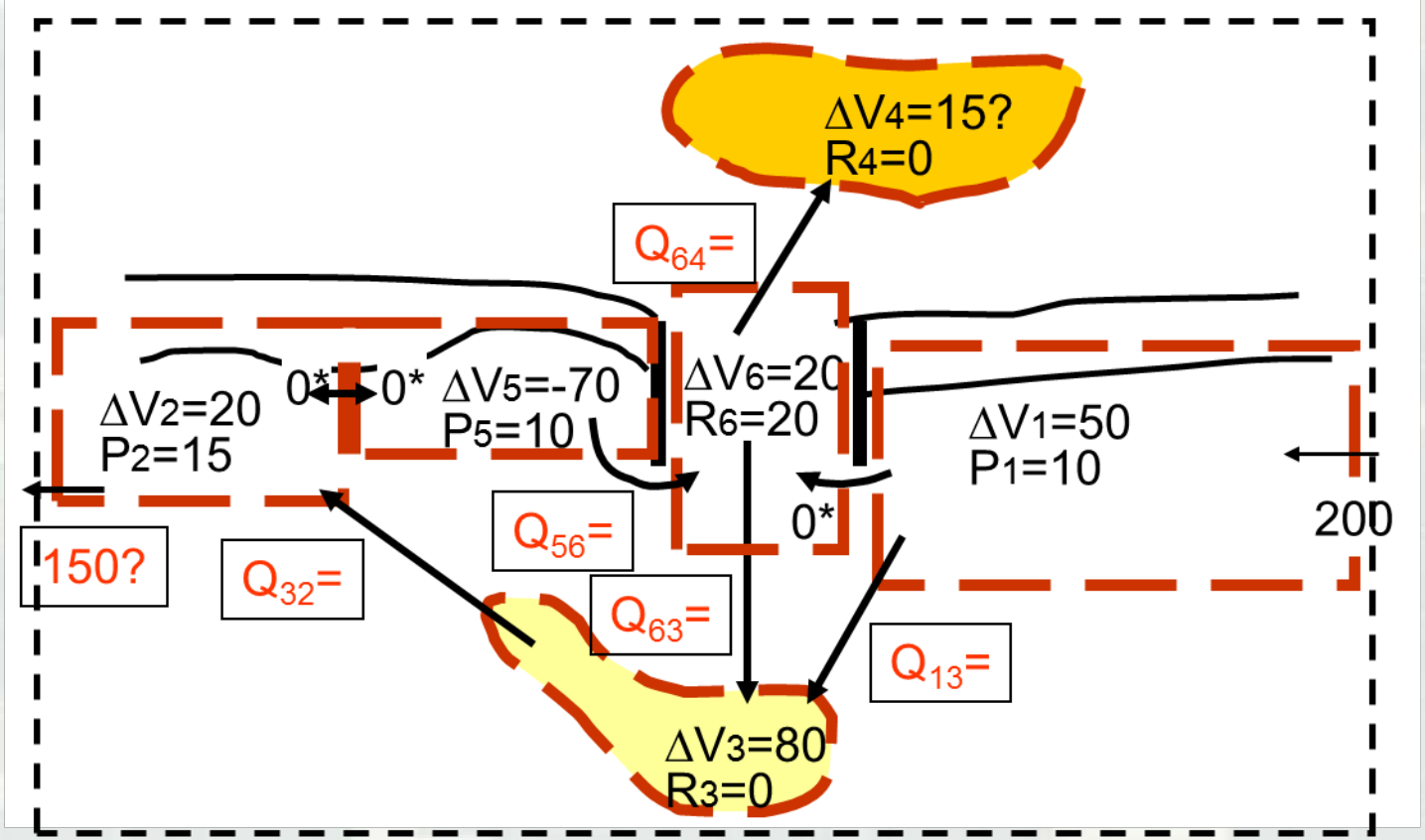

$$\Sigma Q_{source} - \Sigma Q_{sink} - \Delta V + P - R = 0$$

Macrobudget:

(200)-(150?)-(50+20+80+15?+-70+20)+(10+15+10)-(20)=Residual

-50 = Residual

→ Something wrong with assumptions!

Assume 150? Incorrect; solve for Q_{out}

$Q_{out} = 100$

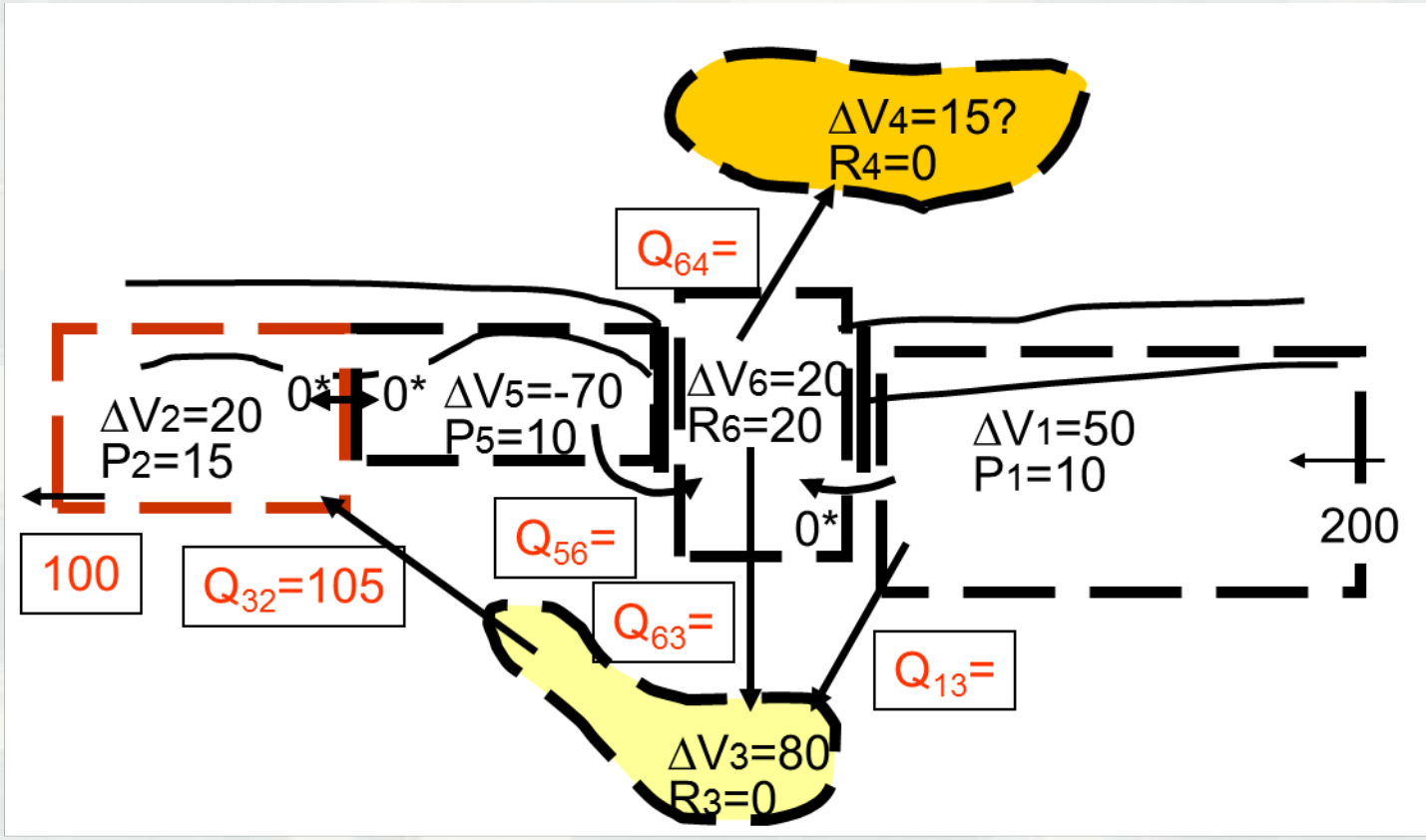

$$\Sigma Q_{source} - \Sigma Q_{sink} - \Delta V + P - R = 0$$

Solve Cell 2:

$(Q_{32})-(100)-(20)+(15)-(0)=0$

$Q_{32}=105$

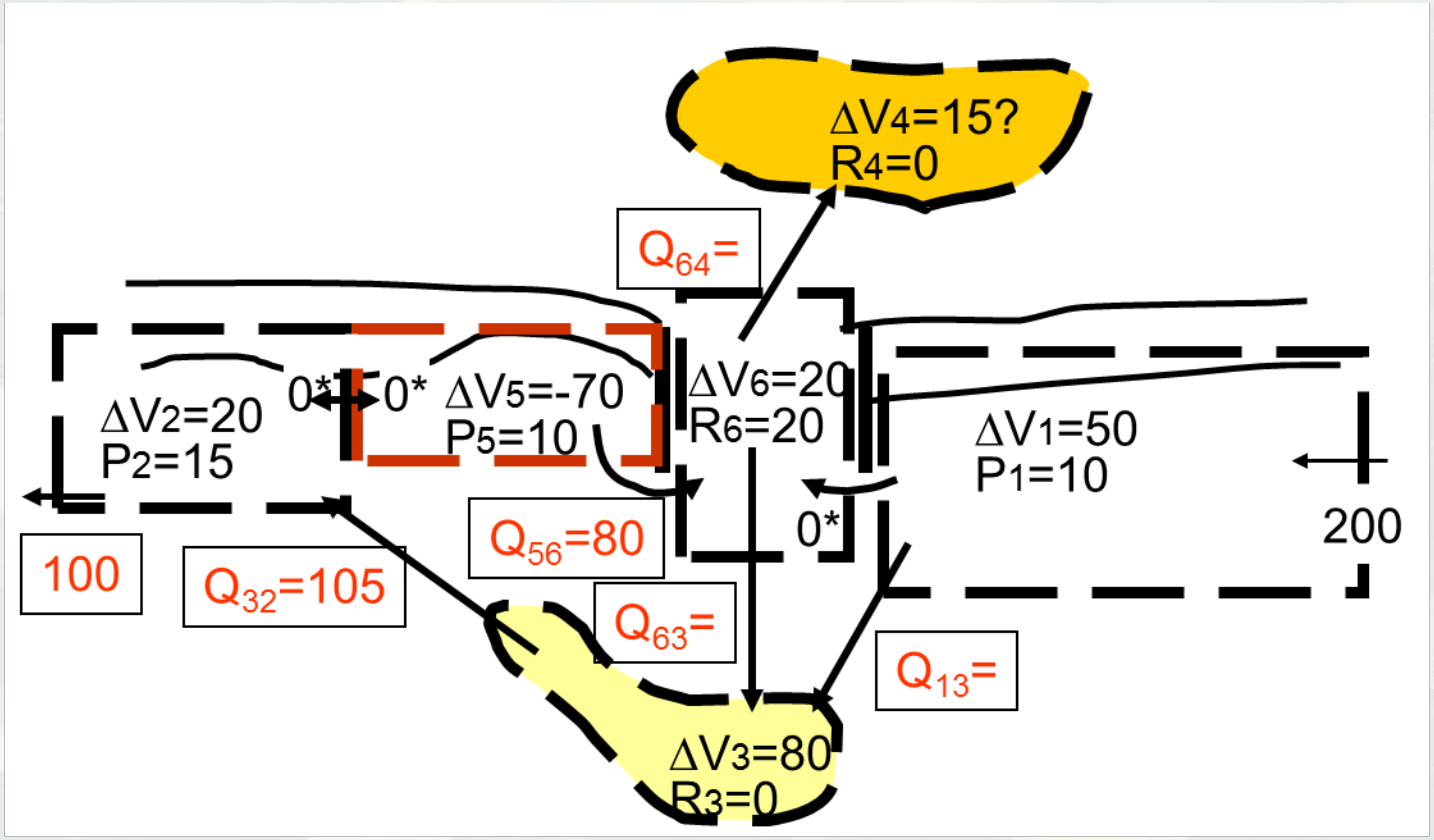

$$\Sigma Q_{source} - \Sigma Q_{sink} - \Delta V + P - R = 0$$

Solve Cell 5:

$$(0)-(Q_{56})-(-70)+(10)-(0)=0$$

$$Q_{56}=80$$

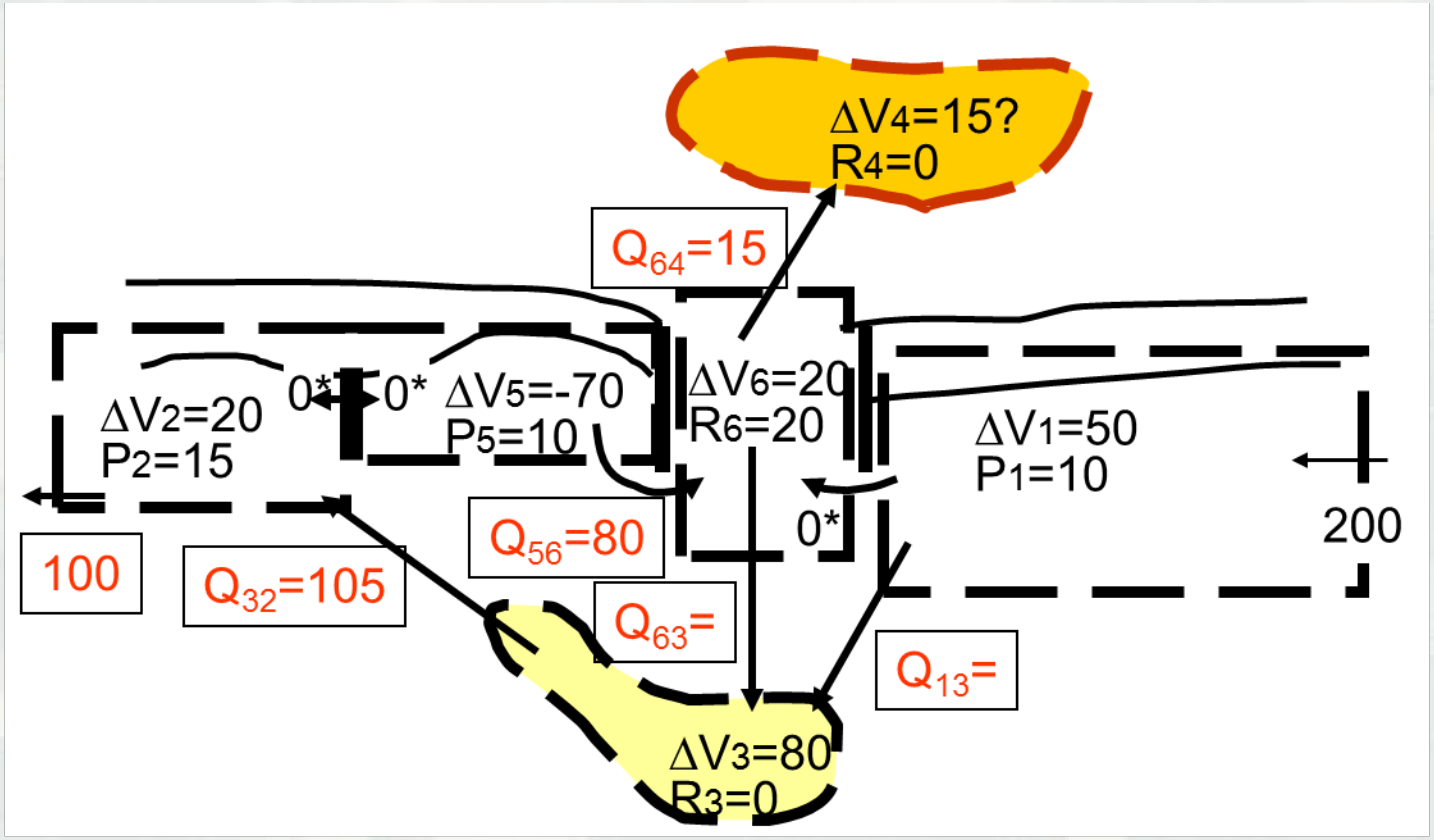

$$\Sigma Q_{source} - \Sigma Q_{sink} - \Delta V + P - R = 0$$

Solve Cell 4:

$$(Q_{64})-(0)-(15)+(0)-(0)=0$$

$$Q_{64}=15$$

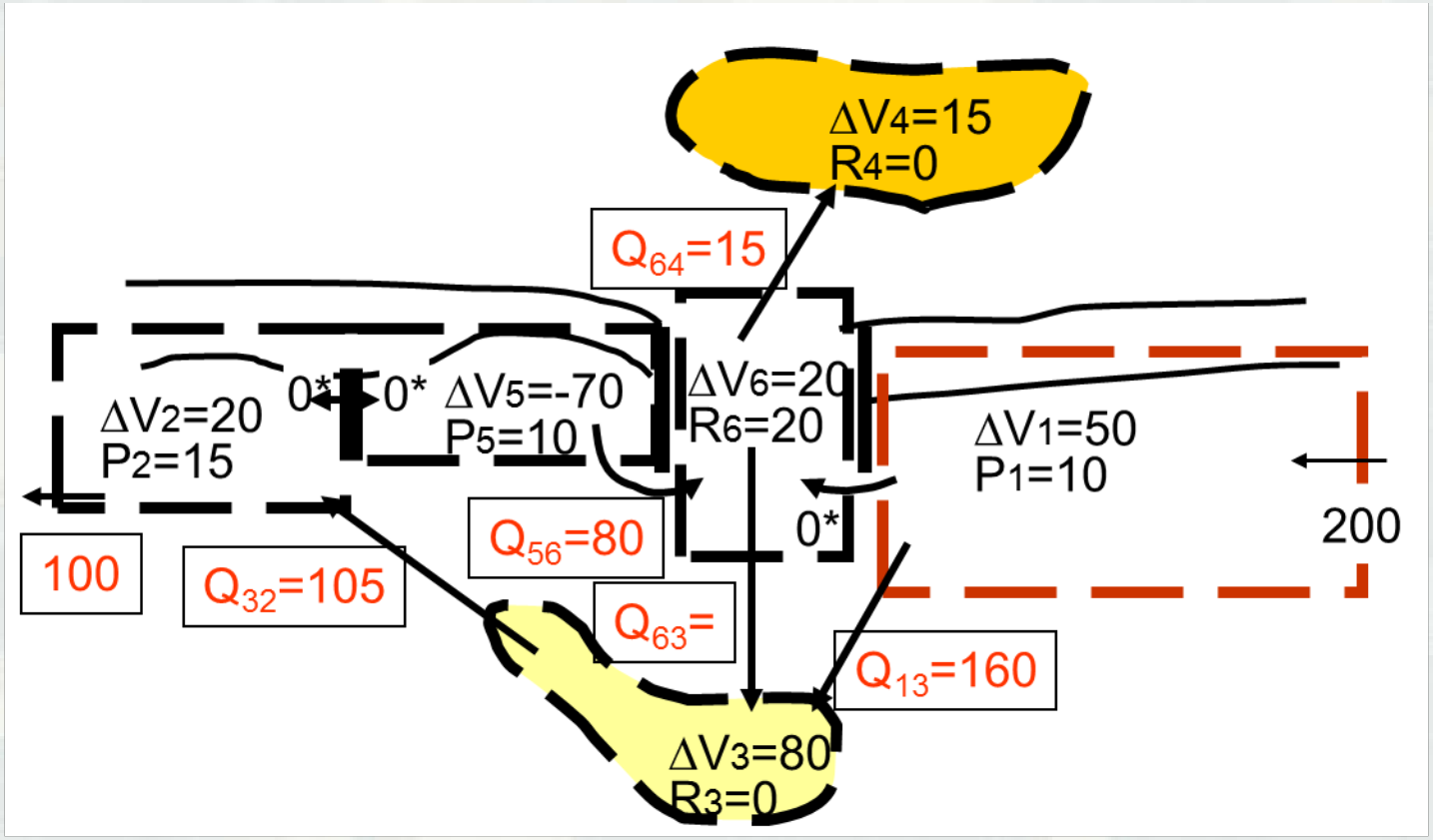

$$\Sigma Q_{source} - \Sigma Q_{sink} - \Delta V + P - R = 0$$

Solve Cell 1:

$$(200)-(Q_{13}+0)-(50)+(10)-(0)=0$$

$$Q_{13}=160$$

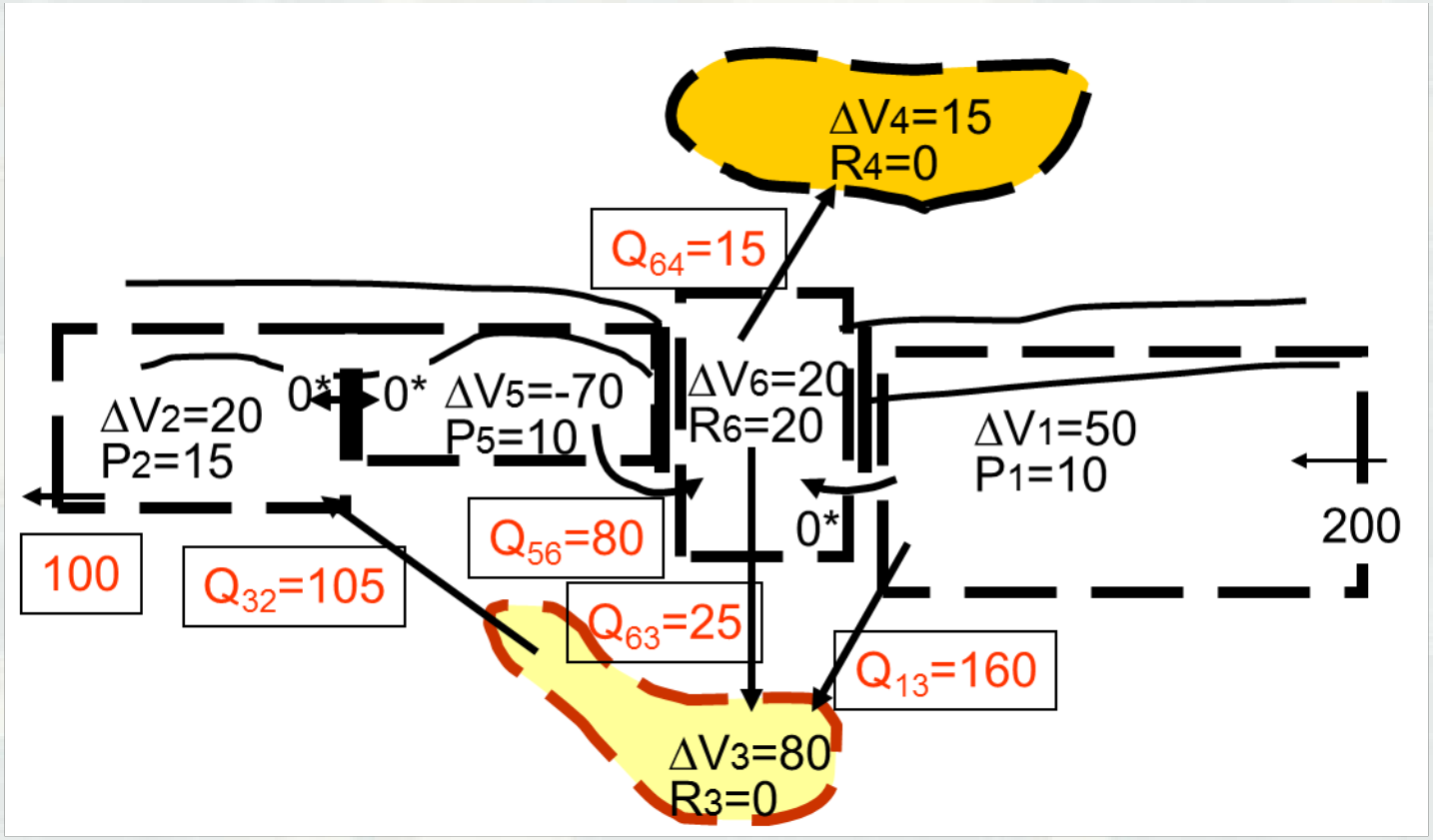

$$\Sigma Q_{source} - \Sigma Q_{sink} - \Delta V + P - R = 0$$

Solve Cell 3:

$$(Q_{63} + 160) - (105) - (80) + (0) - (0) = 0$$

$$Q_{63} = 25$$

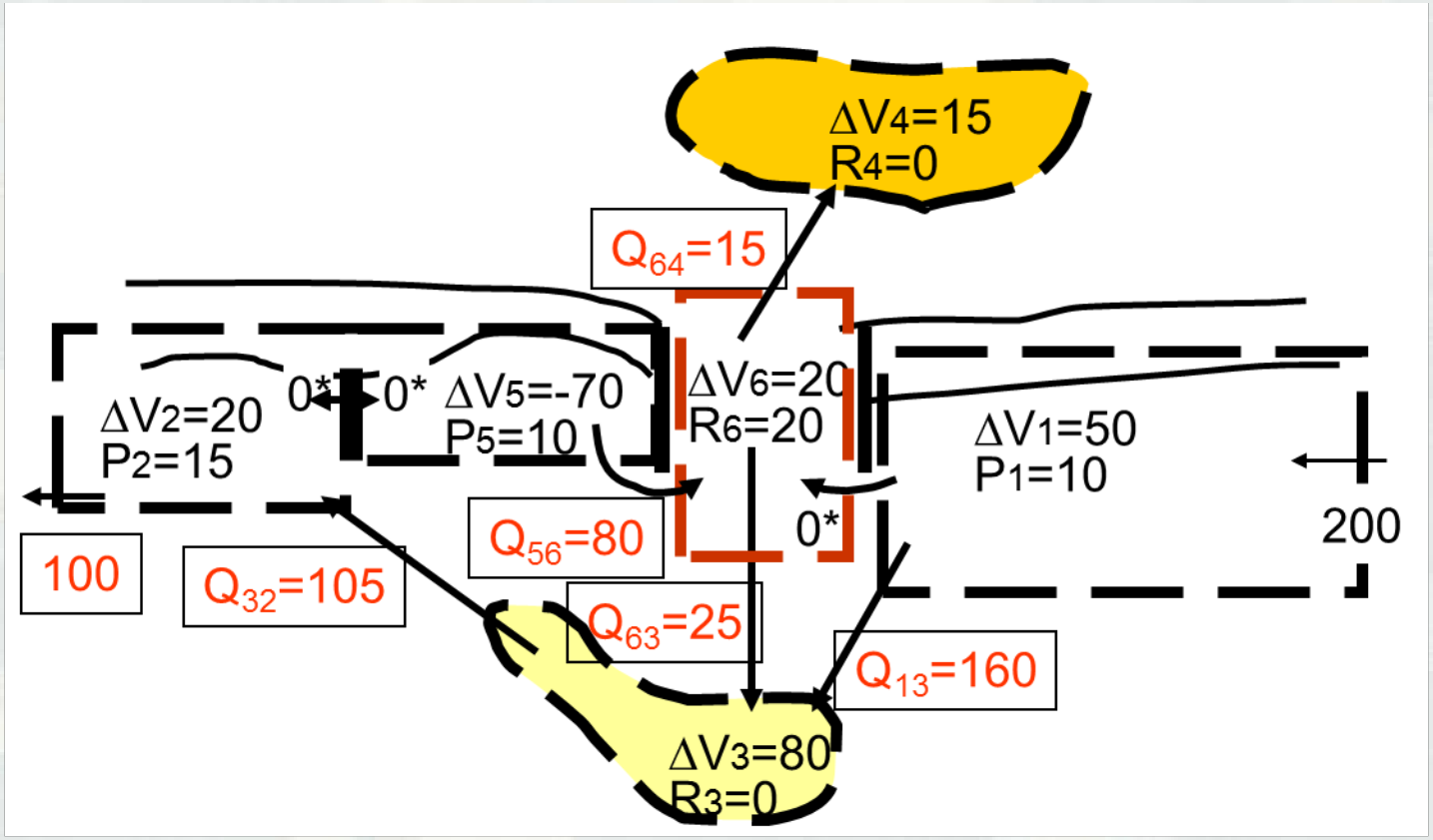

$$\Sigma Q_{source} - \Sigma Q_{sink} - \Delta V + P - R = 0$$

Cell 6 (check):

(0 + 80)-(15+25)-(20)+(0)-(20)=0

~ Balanced budget ~